Thermal Design of Vapor Cooling of Flight Vehicle Structures using LH2 Boil-off

Xiao-Yen Wang

&

Joseph Zoeckler

NASA Glenn Research center

08-03-2015

GSFC · 2015

Outline

- Background of the vapor cooling using LH2 boil-off
- Vapor cooling concept considered for SLS EUS forward skirt
- 1D thermal model to investigate
  - ✓ size of the cooling tube
  - ✓ number of the cooling tubes
  - ✓ entire or partial length of the skirt to be cooled
- 3D thermal model prediction of vapor cooling performance
  - ✓ Four configurations
    - a. One spiral cooling tube with 3 turns covering the entire skirt
    - b. One spiral cooling tube with 2 turns covering 25% of the skirt length
    - c. Two spiral tubes with one turn each covering 25% of the skirt length
    - d. Axial cooling tubes (16) covering 25% of the skirt length
  - ✓ Two scenarios
    - on ground (steady-state)
    - 5 day lunar mission (transient)
- Conclusions

Background

- **Using LH2 boil-off vapor to cool the flight vehicle upper stage structure can**
  - ✓ **Reduce heat leak to the LH2 tank**
  - ✓ **Lower the boiling-off rate such that saving mass of propellant and extending the life of the stage**
  - ✓ **Heat up the vented gas for other purpose as a heat source (tank settling)**
- **In theory, the heat leaking into LH2 tank from the structure will be reduced with the boil-off vapor cooling on the structure**
- **However, the amount of heat leak reduction depends on**
  - ✓ **The amount of boil-off vapor is available**
  - ✓ **The total heat load on the structure**
  - ✓ **Vapor cooling configurations**

Vapor cooling concept

Cooling loop
on forward skirt

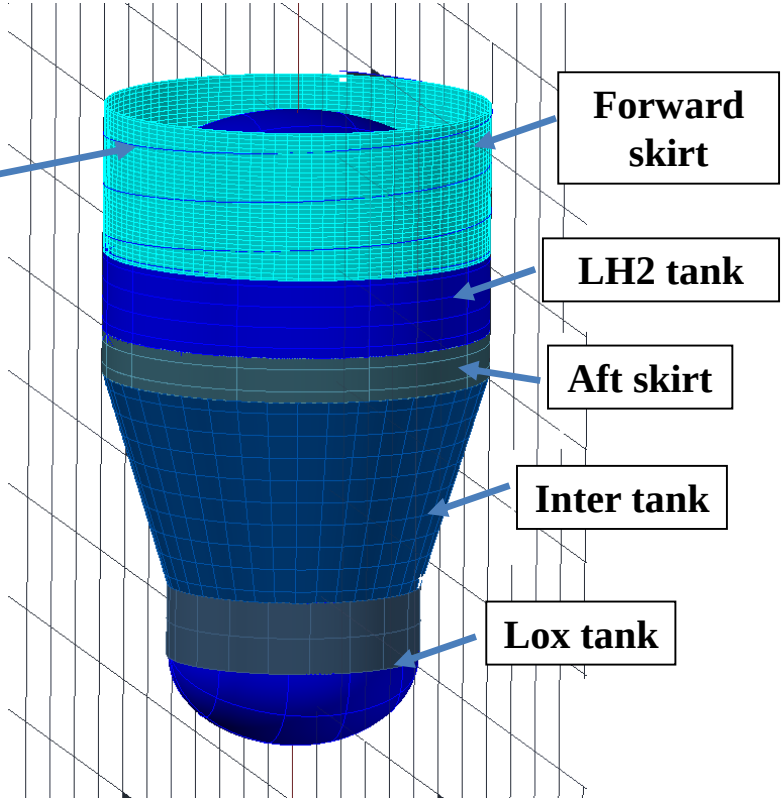

Space launch system (SLS)
Exploration Upper Stage(EUS)

1D analysis

- Vapor cooling configuration:
  - ✓ Upstream and downstream manifolds + axial tubes
  - ✓ Provides uniform cooling to the skirt in the circumferential direction
- Need to investigate:
  - ✓ Number of cooling tubes along axial direction (8,16,32, 64)
  - ✓ Length of the skirt to be cooled (100%, 75%, 50%, 25%)
  - ✓ Size of the cooling tubes (ID = 3/4”,3/8”,1/8”)
- Build a 1D thermal model (4 nodes along the entire skirt length)

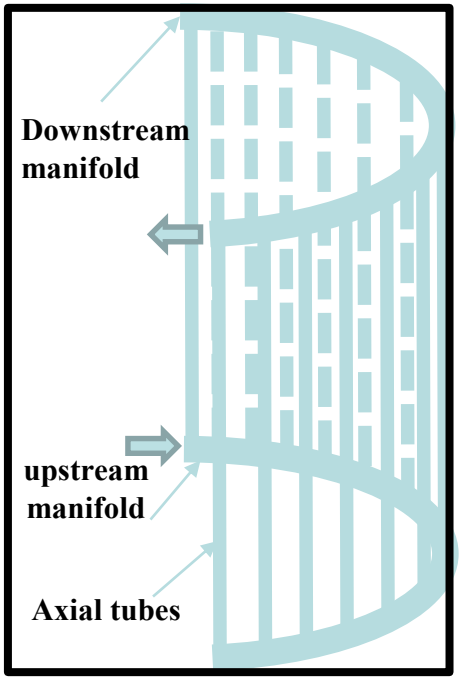

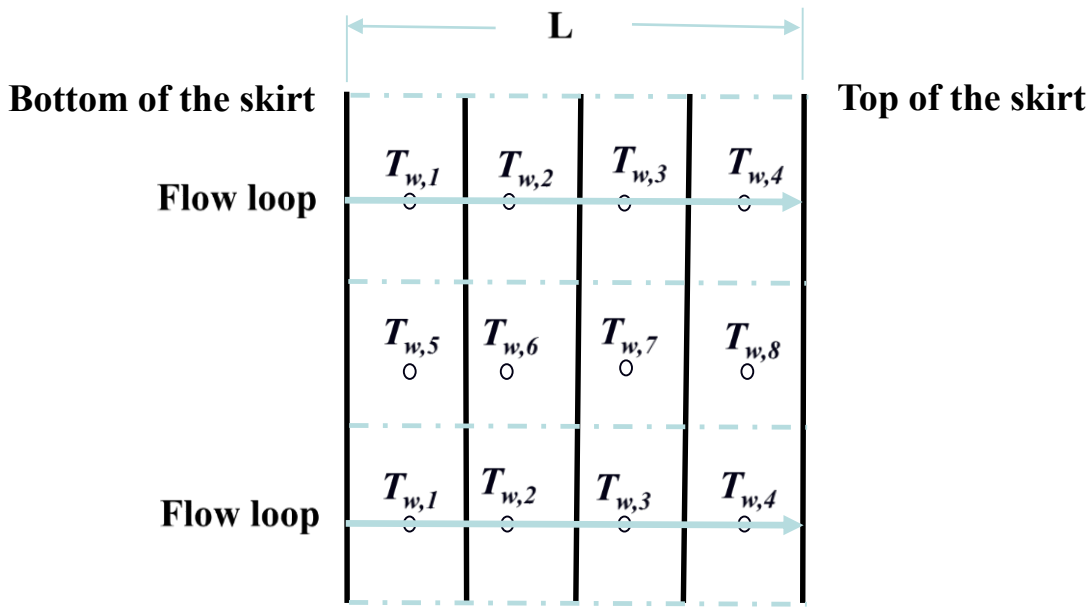

1D thermal circuit for tubing along axial direction

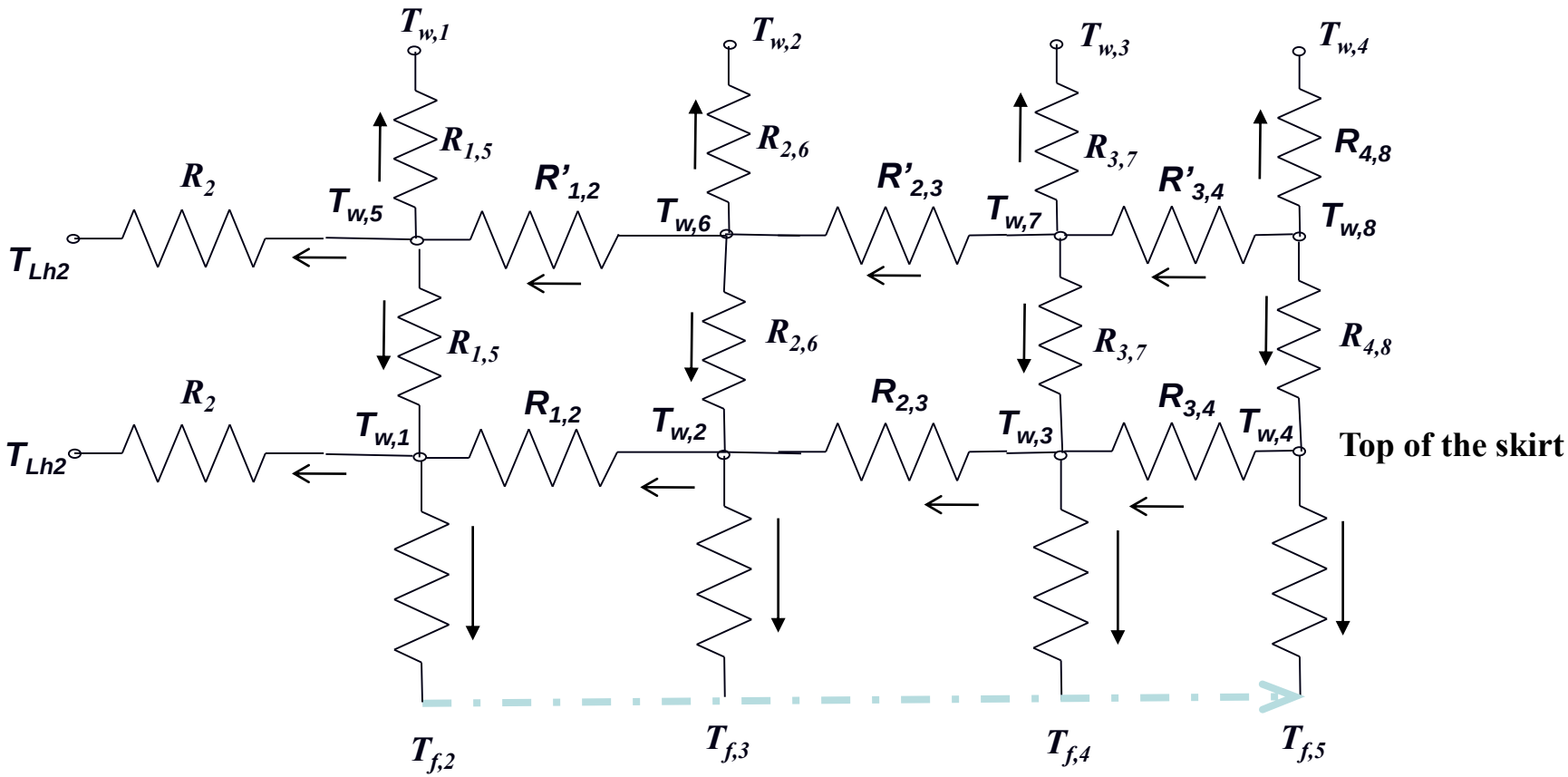

$R_{1,2}$, $R_{2,3}$ and $R_{3,4}$: conduction resistance, R_2 : contact resistance

1D thermal model results for axial tubing (16 tubes)

1. Baseline 1: no insulation on the skirt, top of the skirt: adiabatic
2. Baseline 2: insulate the skirt, top of the skirt: T = 300 K
3. Ambient: T_a = 300 K, radiation only

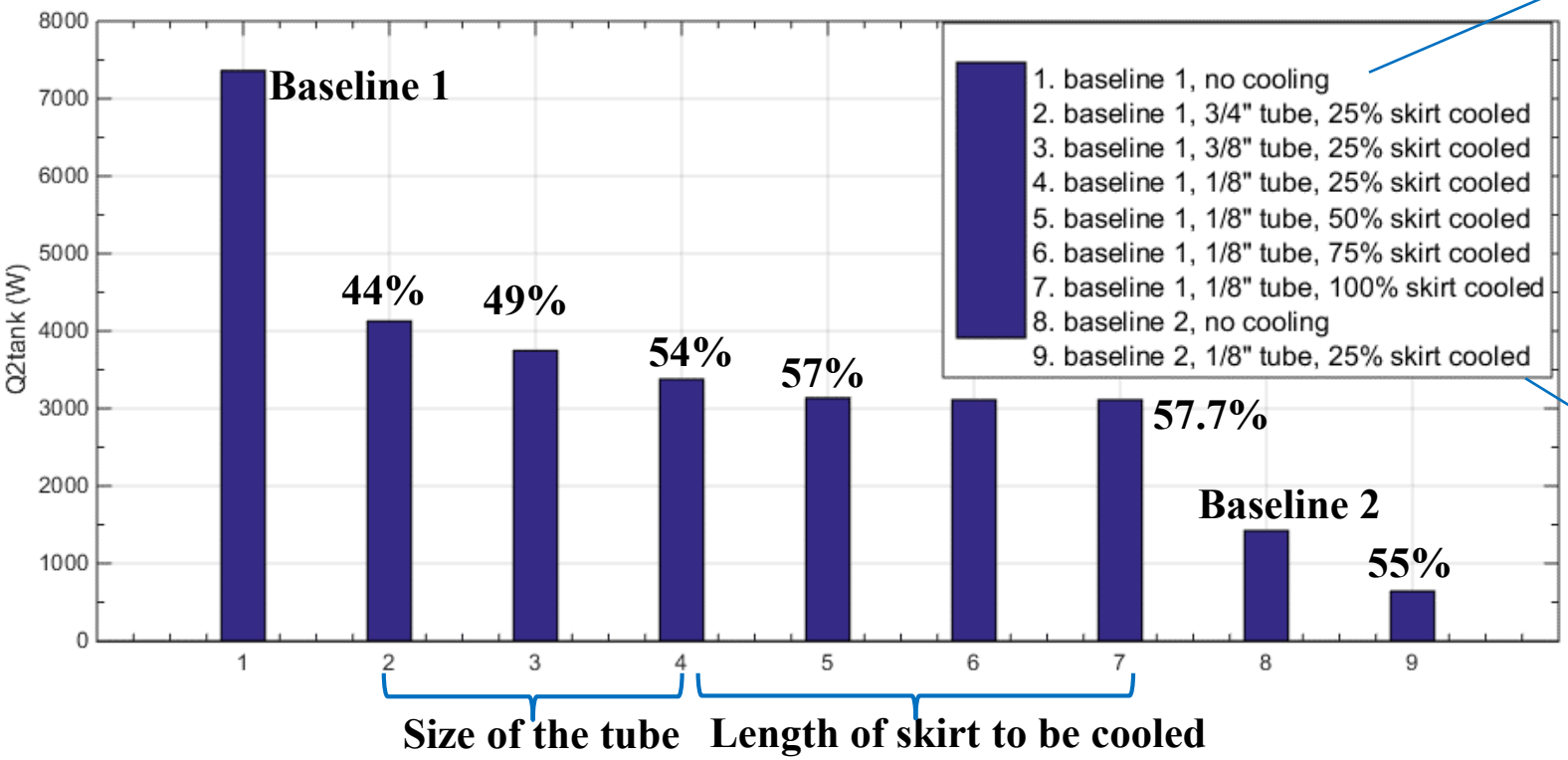

Q2tank (W)	Heat leak reduction
7360	0
4127	44%
3747	49%
3377	54%
3135	57%
3112	57.7%
3112	57.7%
1422	0
640	55%

- Cooling the 25% of the skirt from the bottom is almost as effective as cooling the entire skirt.
- Using smaller tubing (1/8" diameter) provides less heat to the tank with higher pressure drop.
- Insulating the skirt will reduce significant heat leaking into the tank.

1D analysis results

(25% of skirt length is cooled, 16 tubes)

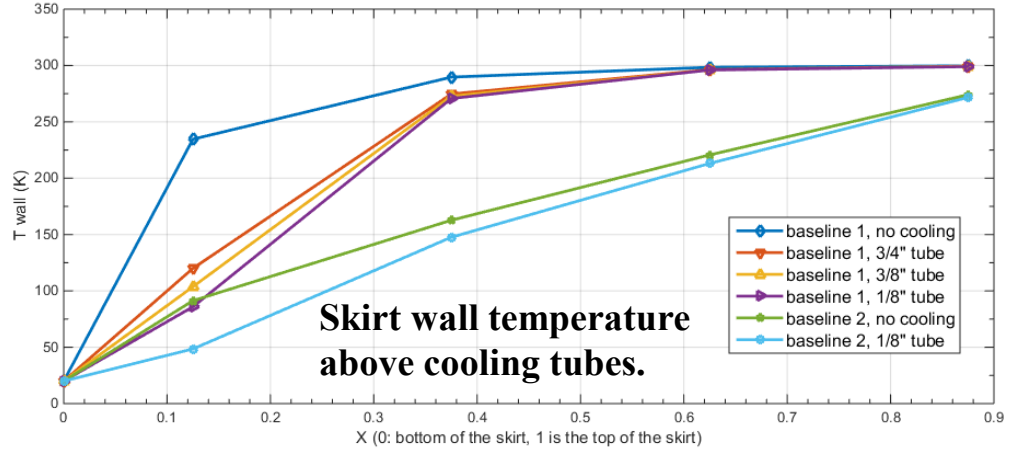

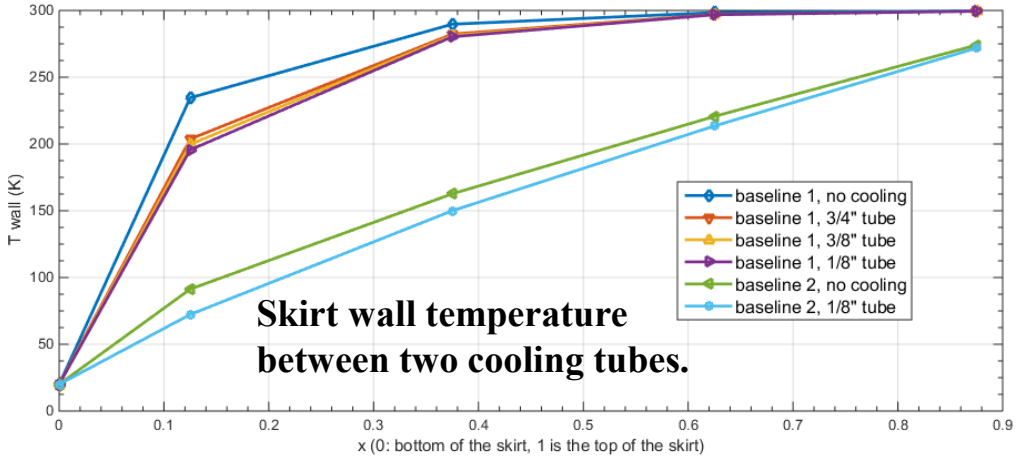

(1/8" diameter tube, cool 25% of the skirt length)

No. of cooling tubes	Total Q2tank (W)	Heat reduction
0	7360	0
8	3847	47.7%
16	3377	54.1%
32	2765	62.4%
64	2317	68.5%

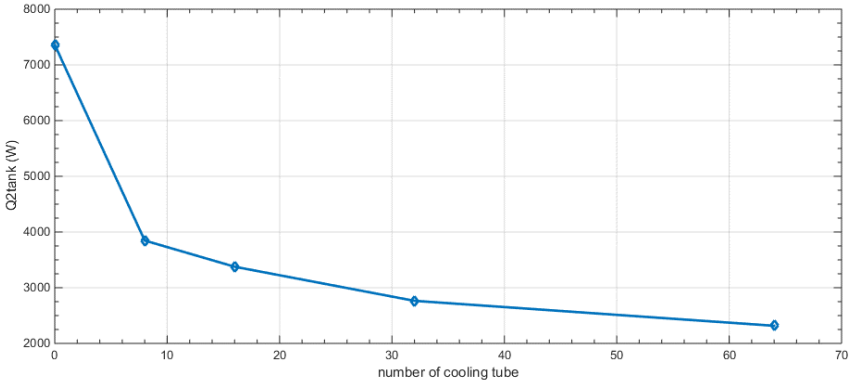

1D analysis results

Sensitivity study of the contact resistance between skirt and tank (R_2)

1/8" tube, 16 tubes, 25% skirt cooled	1500 w/m²-k	3000 w/m²-k	6000 w/m²-k
Q2tank (W) (no cooling)	6776	7360	7680
Q2tank (W) (cooling)	3185.6	3377.7	3491.2
Heat leak reduction	53%	54%	54.5%

Different size of skirt/tank

1/8" tube, 16 tubes, 25% skirt cooled	Half diameter, half length	Baseline 1	Half diameter, same length
Q2tank (W) (no cooling)	2700.8	7360	2186
Q2tank (W) (cooling)	1209.6	3377.7	947.2
Heat leak reduction	55.2%	54.1%	56.7%

Different sink temperature

1/8" tube, 16 tubes, 25% skirt cooled	Ta = 300 K	Ta = 200 K	Ta = 100 K
Q2tank (W) (no cooling)	7360	2640	345.6
Q2tank (W) (cooling)	3377.7	1215	184.8
Heat leak reduction	54.1%	54%	46.5%

- **Roughly similar percentage of heat leak reduction to LH2 tank for different size of skirt (length or diameter)**
- **Vapor cooling is more effective when ambient is warmer.**

3D thermal modeling using Thermal Desktop (TD):

Vapor cooling configurations:

- ✓ Tubing along the circumferential direction (spiral, (a), (b), (c))
- ✓ Tubing along the axial direction (d)

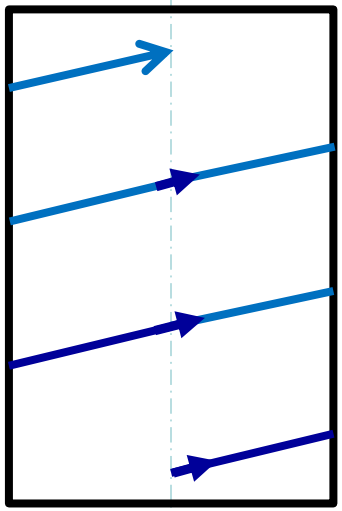

(a)1 loop with 3 turns, on entire skirt

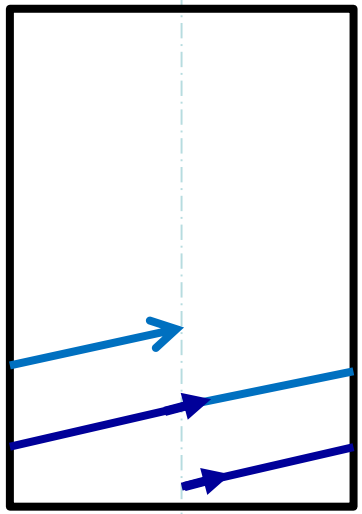

(b) 1 loop, 2 turns, on 25% of skirt length

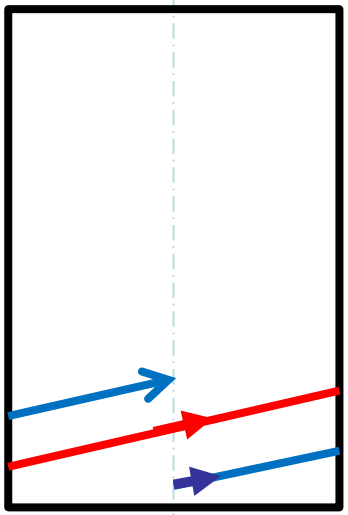

(c) 2 loops, 1 turn/per loop, on 25% of skirt length

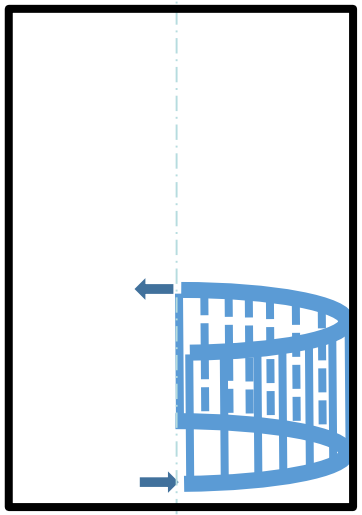

(d) Tubing along the axial direction, on 25% of skirt length

- Tube size: ID = 0.824”, OD = 1.05”
- Tube material: Al 2219-T6
- Tube starts at 8.5” from the bottom of the skirt

3D analysis results

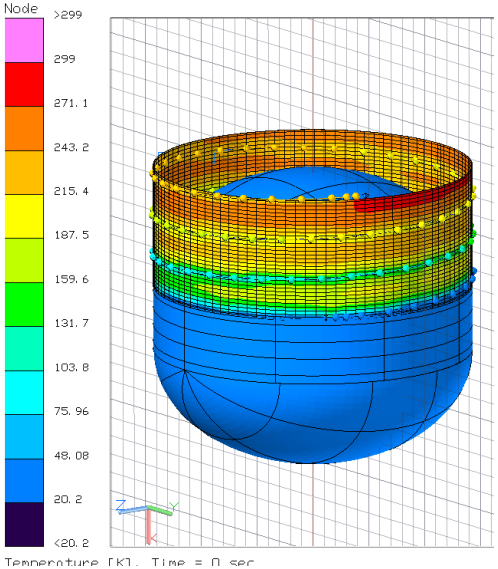

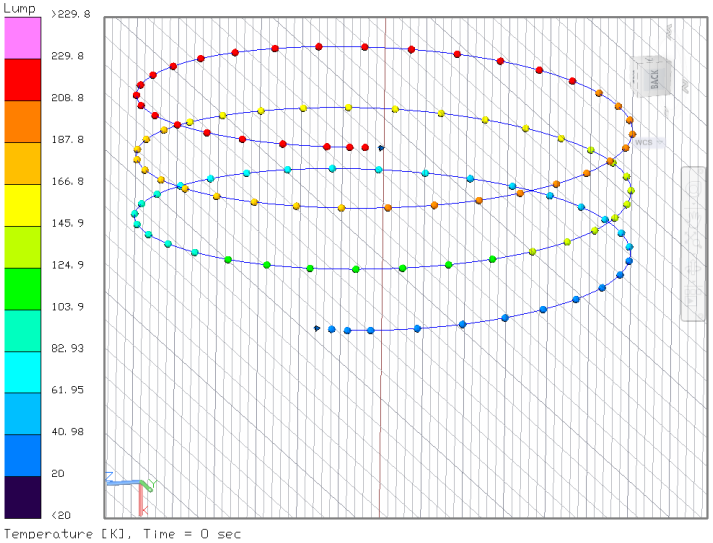

✓ **No cooling loop:**
Q2tank = 8013 W
from forward skirt

Option A, one spiral tube covers the entire skirt

Vapor mass flow rate (kg/s)	Q2tank (W)	Q2fluid (W)
0.008	3627.7	23711

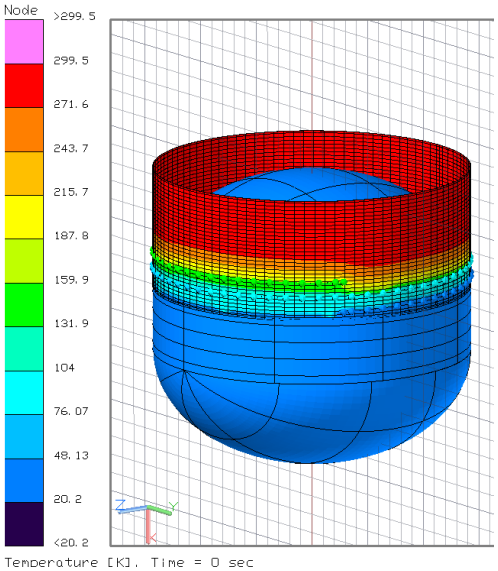

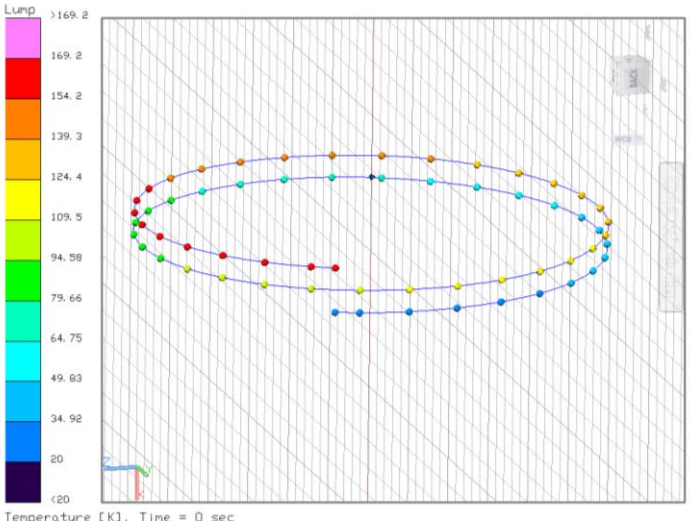

Option B, one spiral tube (2 turns) cover 25% of the skirt length

Vapor mass flow rate (kg/s)	Q2tank (W)	Q2fluid (W)
0.008	2346	12803
0.006	2665.6	11884

3D analysis results

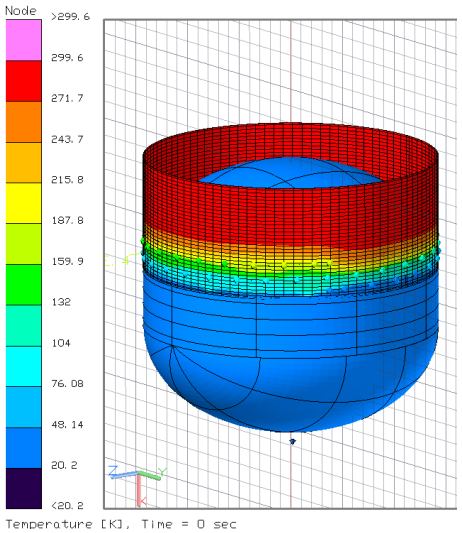

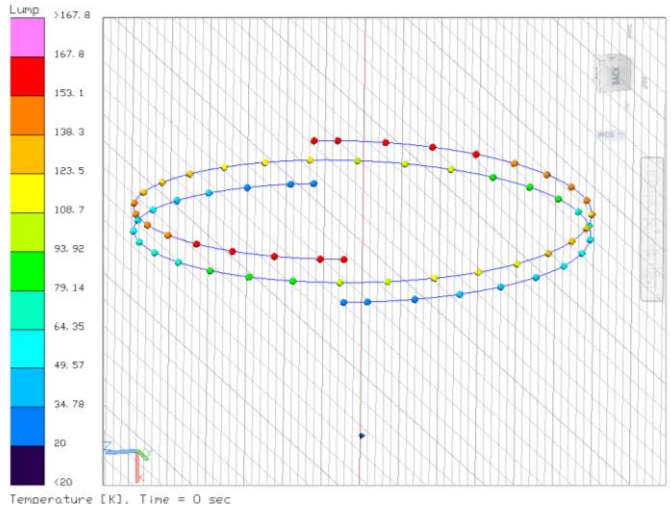

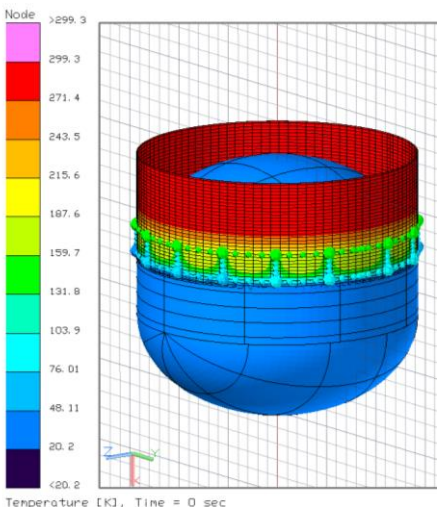

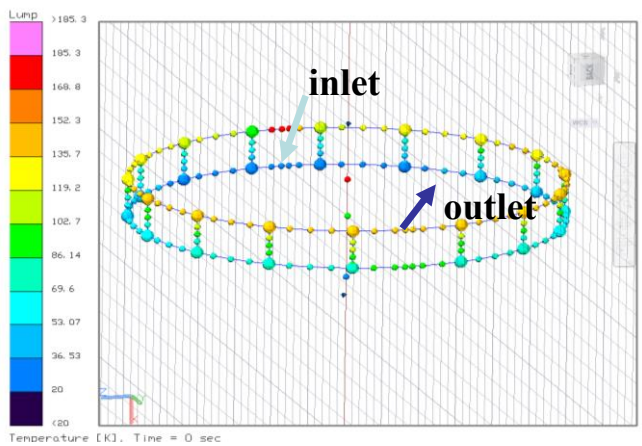

1D model prediction: mass flow rate: 0.00786 kg/s, Q2tank = 3377 W (16 vertical tube of 1/8" ID covers 25% of the skirt length, no manifold)

Option C, two spiral tubes (1 turn) cover 25% of the skirt length

Vapor mass flow rate (kg/s)	Q2tank (W)	Q2fluid (W)
0.008	2449	12638
0.006	2817	11665

Option D: two manifolds + 16 vertical tubes, cover 25% of the skirt length (manifold: ID = 0.824", OD = 1.05" Vertical tube: ID = 0.269", OD = 0.405")

Vapor mass flow rate (kg/s)	Q2tank (W)	Q2fluid (W)
0.008	3058	12960
0.007	3362	12335

(manifold: ID = 0.493", OD = 0.675", Vertical tube: ID = 0.125")

Vapor mass flow rate (kg/s)	Q2tank (W)	Q2fluid (W)
0.008	2944	13348
0.007	3230	12743

Summary of the 3D TD results

	tube size: ID = 0.824” OD = 1.05”					
Configuration	Vapor mfr (kg/s)	Q2tank (W)	Q2fluid (W)	Pdrop (psi)	Texit (K)	Heat leak reduction
A	0.008	3627.7	23711	11.8	229.8	59.7%
B	0.006	2665.6	11884	3.35	169.1	66.7%
C	0.006	2817	11665	0.14	167.8	64.8%
D	0.007	3362	12335	0.89	185.3	58%

	tube size: ID = 0.493”, OD = 0.675”					
Configuration	Vapor mfr (kg/s)	Q2tank (W)	Q2fluid (W)	Pdrop (psi)	Texit (K)	Heat leak reduction
A	0.008	3732.6	23666	64.8	226.2	53.4%
B	0.006	2663.5	12849	28.7	144.1*	66.8%
C	0.006	2785	11714	6.5	169.0	65.2%
D	0.007	3230	12743	8.0	196.3	59.7%

- **Configurations B and C results in the least heat to the LH2 tank.**
- **Tube size of 0.5” ID will have much higher pressure drop.**
- **For the tube along the axial direction, more vertical tubes are necessary if heat leak to LH2 needs to be further reduced.**

(* convergence problem)

3D transient analysis

- **5 day lunar mission is considered for vapor cooling configuration performance**
  - **Lunar orbit rendezvous (lander)**
    - **On ground: 300 K sink temperature**
    - **Low Earth Orbit (LEO): 3 hr (2 orbits)**
    - **Trans lunar Cruise (TLC): 5 days**
      - **Nose to Sun**
      - **Broadside to Sun**
      - **Broadside to Sun with spin**

LEO and TLC orbits

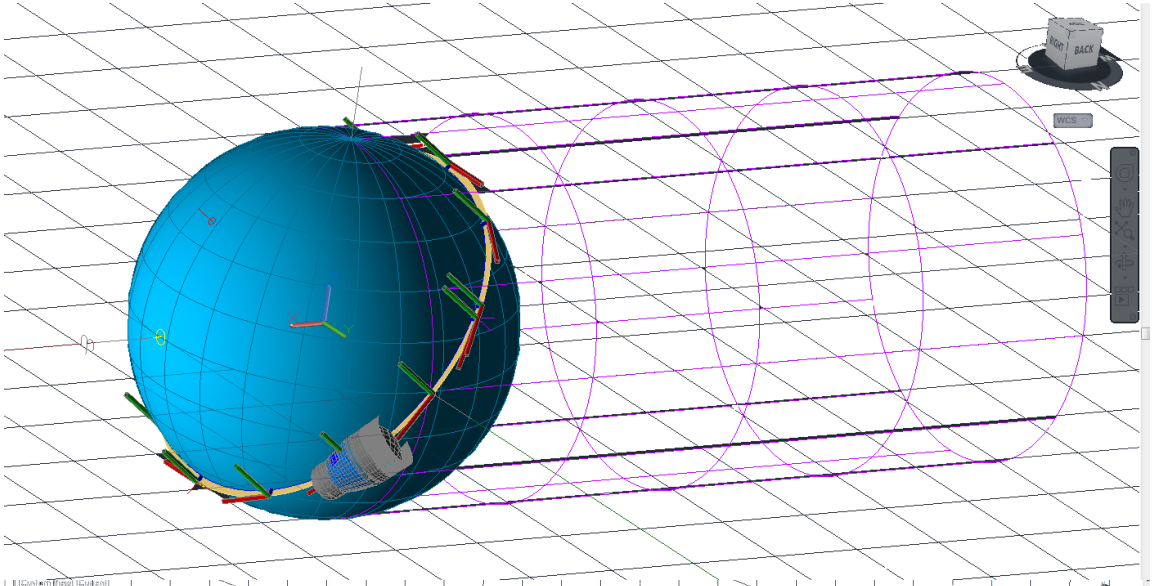

LEO, altitude = 240 km, beta = 52º, +Z to Nadir, period = 1.488 hr

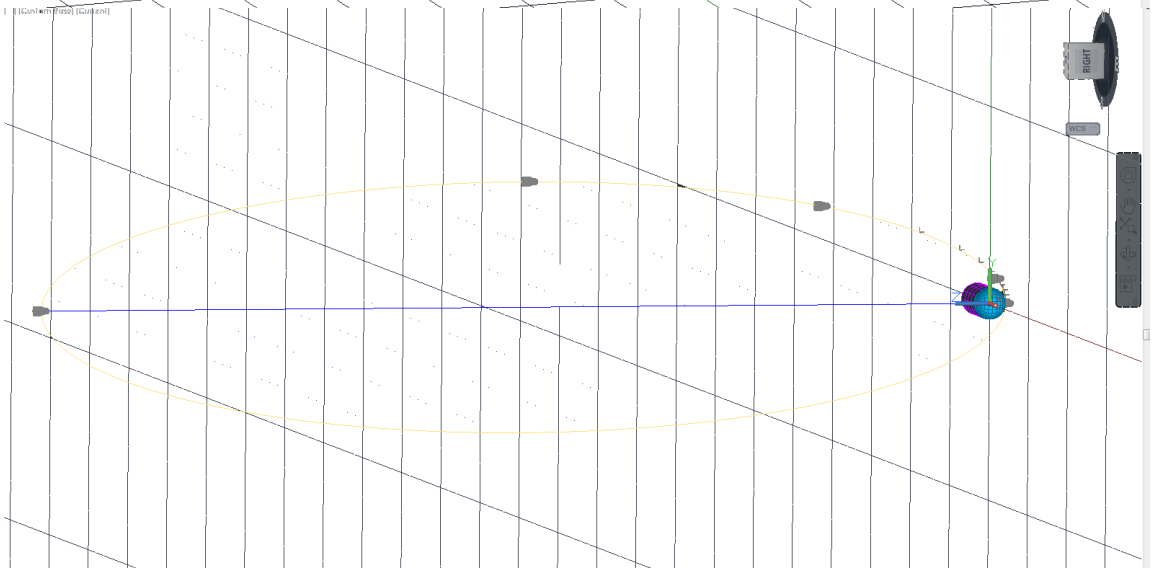

TLC, broadside to sun, inclination angle = 90º, period is 10 days

Sink temperature at different locations on the forward skirt

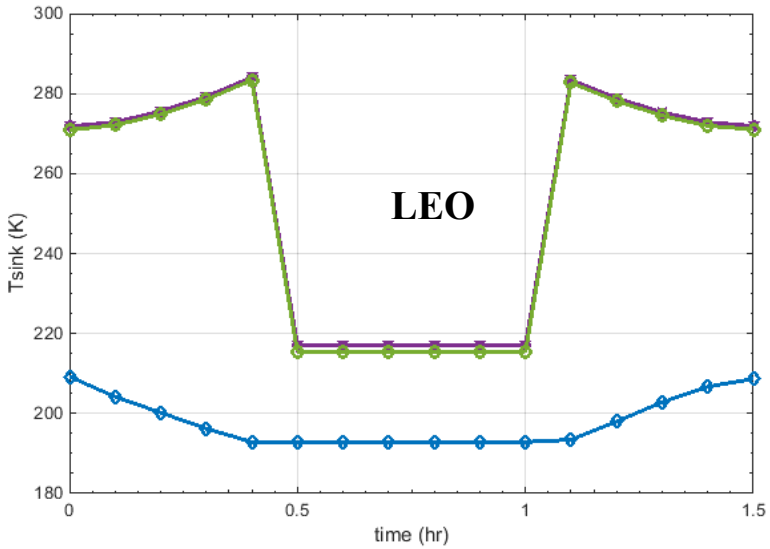

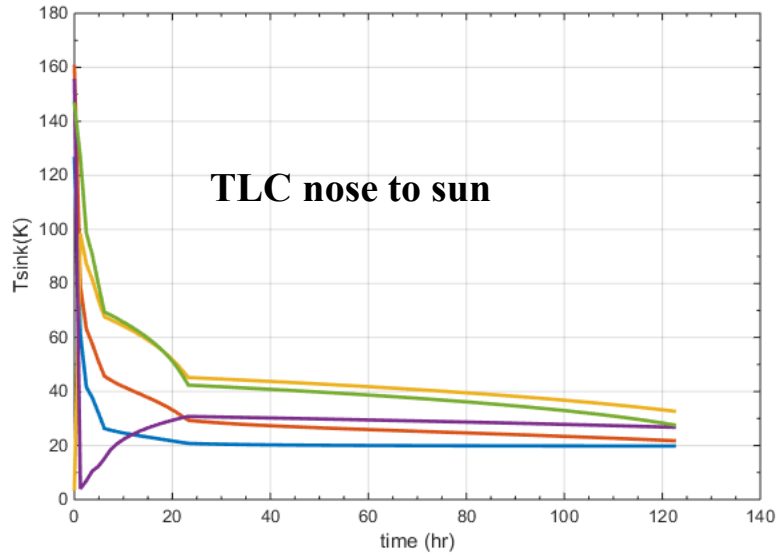

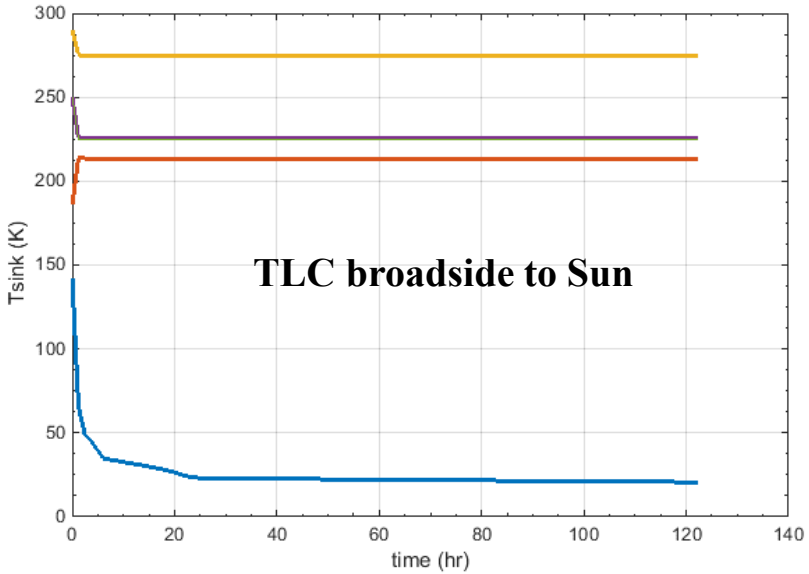

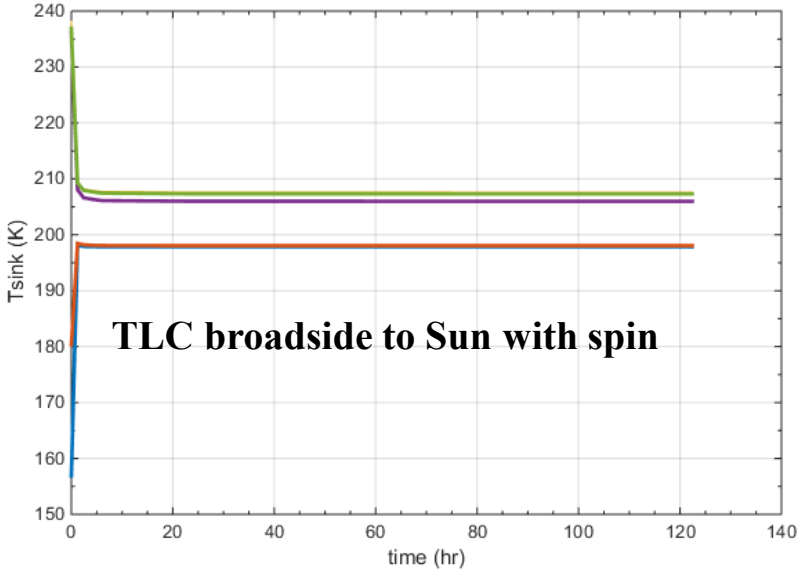

Time history of Q2tank from forward skirt to LH2

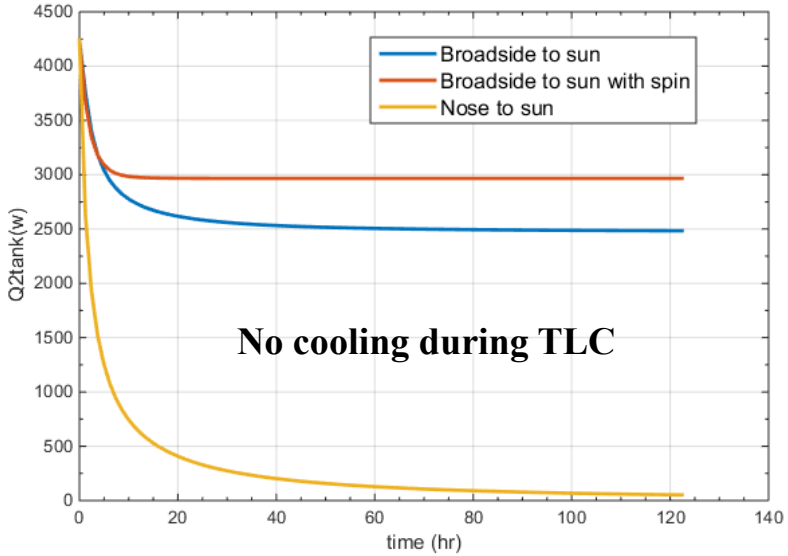

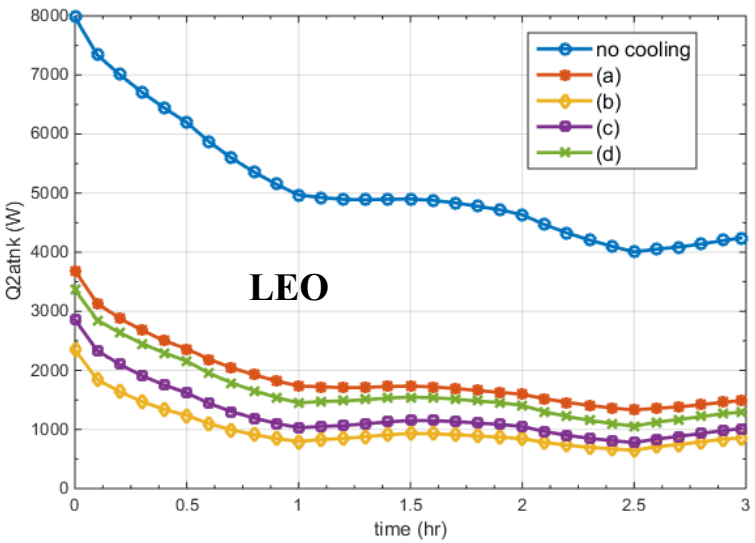

For TLC,

- **Nose to Sun is the coolest environment.**
- **Broadside to Sun with spin is the warmest.**
- **Broadside to Sun is considered for vapor cooling configurations performance.**
- **A constant vapor mass flow rate of 0.006 kg/s is used for all configurations.**

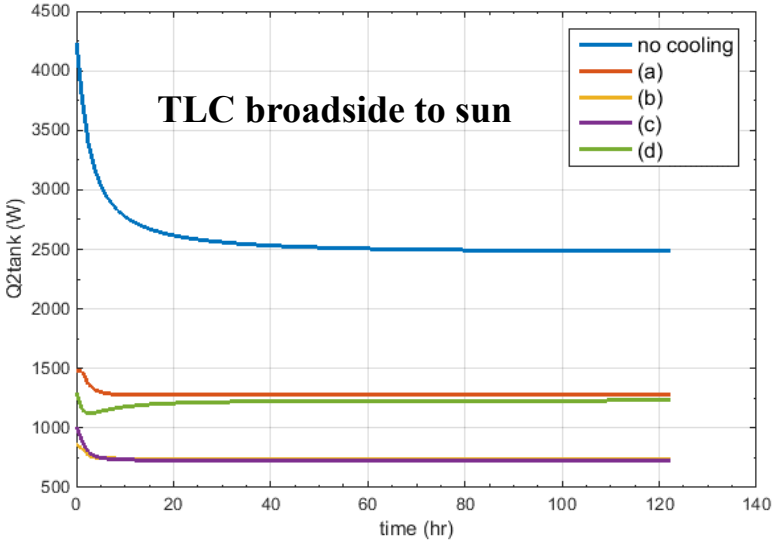

Temperature distribution at different time

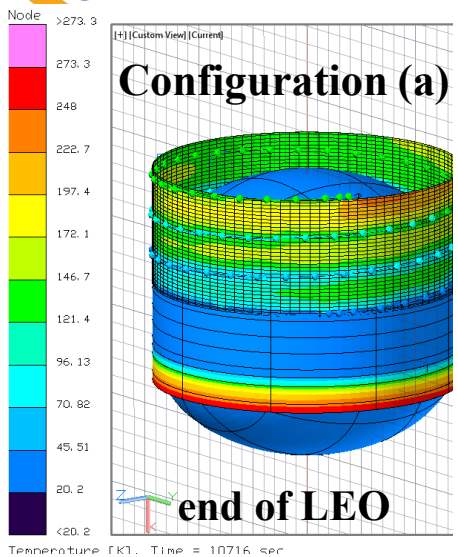

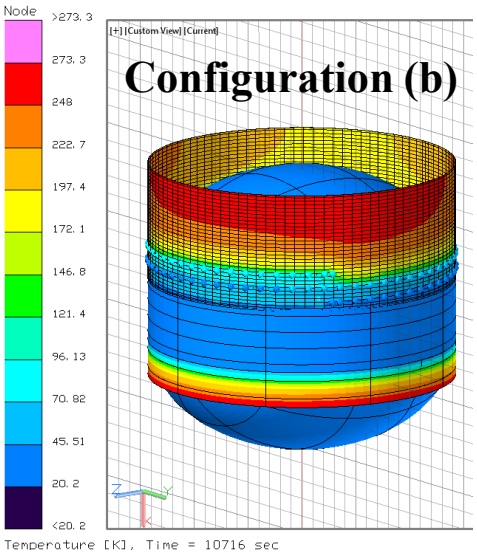

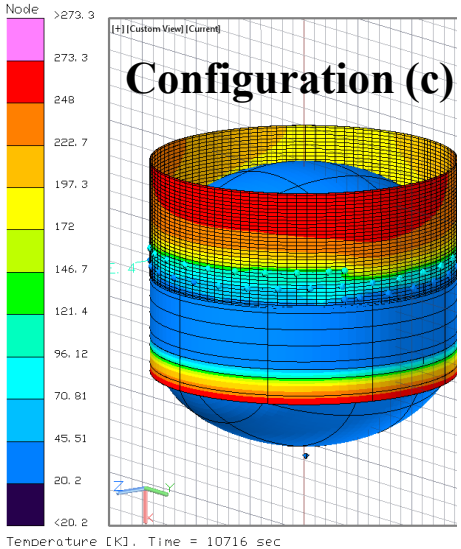

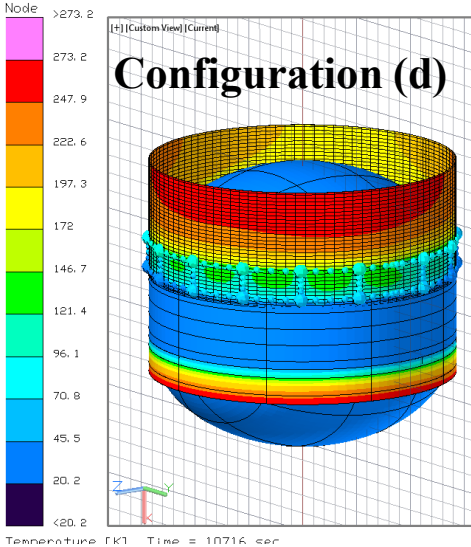

end of LEO

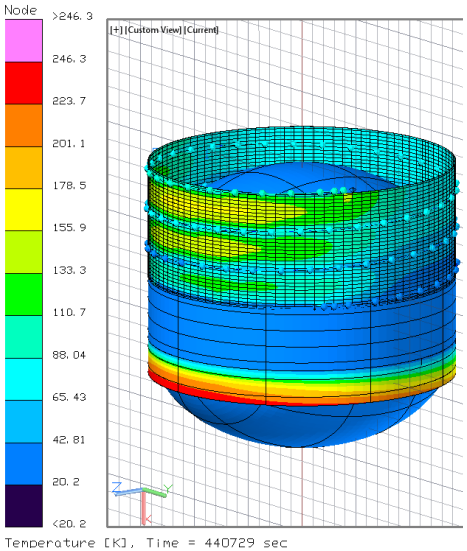

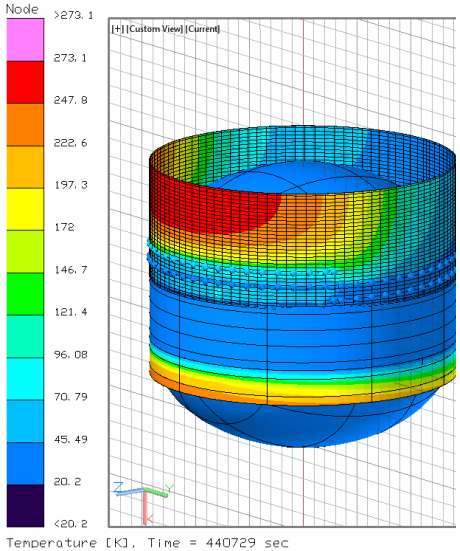

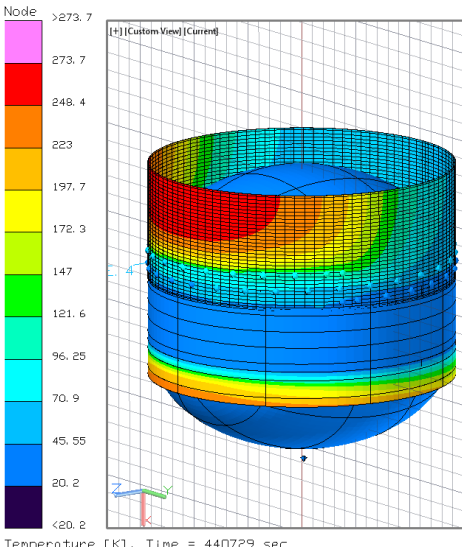

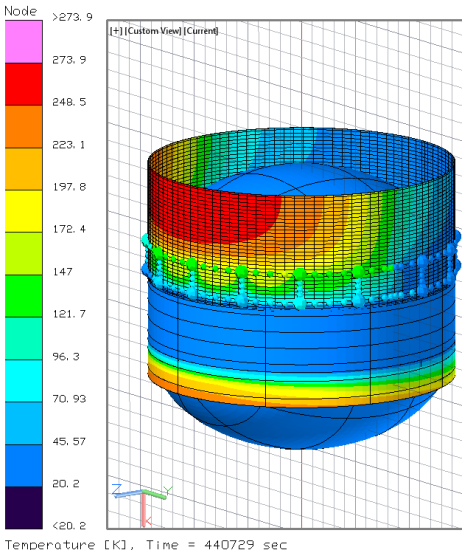

end of TLC

Conclusions

- 3D model results showed similar cooling benefit to that indicated by 1-D model results
- Concentrating the cooling closer to skirt/tank connection appears to be more effective
- Multi-tube axial configuration not as effective as spiral tube
- Configurations B and C result in the least heat leak to the LH2 tank. Configuration C has lower pressure drop
- Vapor cooling will be more effective when the heat load is high on the structures
- For LEO, vapor cooling can reduce heat leak to the LH2 tank significantly
- For TLC nose to sun, vapor cooling might not save much heat leak to the LH2

Acknowledgements

- Justin Elchert at GRC: valuable help on the TD model
- Douglas Bell at C & R tech: super tech support all the time
- Wesley Johnson and Lauren Best at GRC: review and technical input
- eCryo project: support of the work and travel to TFAWS