Thermal Design, Tvac Testing, and Lessons Learned for Critical GSE of ATLAS and the ICESat-2 Mission

Heather Bradshaw, NASA GSFC

Presented By

Heather Bradshaw

Thermal & Fluids Analysis Workshop
TFAWS 2016
August 1-5, 2016
NASA Ames Research Center
Mountain View, CA

ICESat-2 Mission

ICESat-2 Mission:

Goals include measuring:

- **Land ice, Sea ice**
  - **Area coverage**
  - **Elevation,** including change in height over time, (to calculate **change in ice thickness)**
  - **Local slope** and map changes of **topography**
- **Vegetation**
  - Area coverage, Elevation (canopy height, etc)
  - **Estimate global biomass**

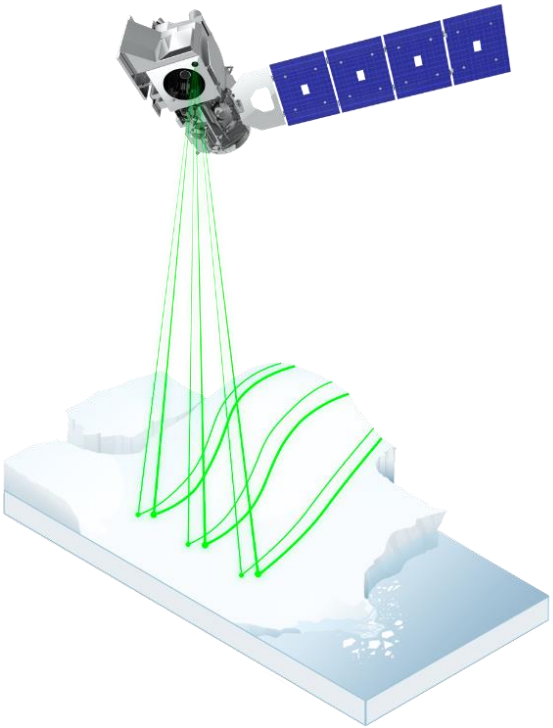

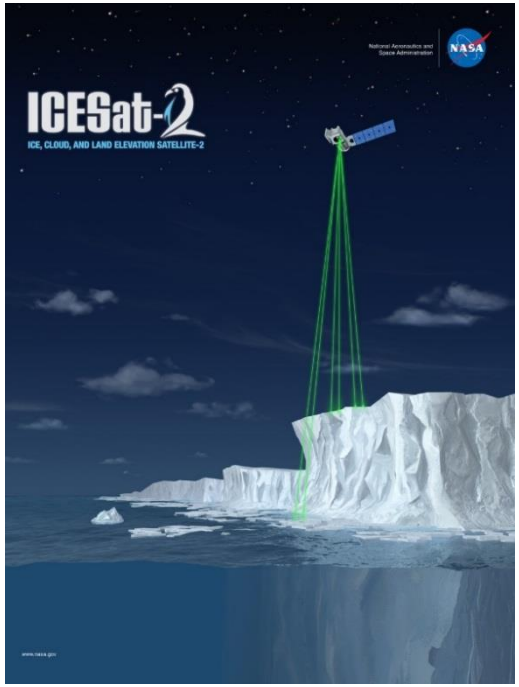

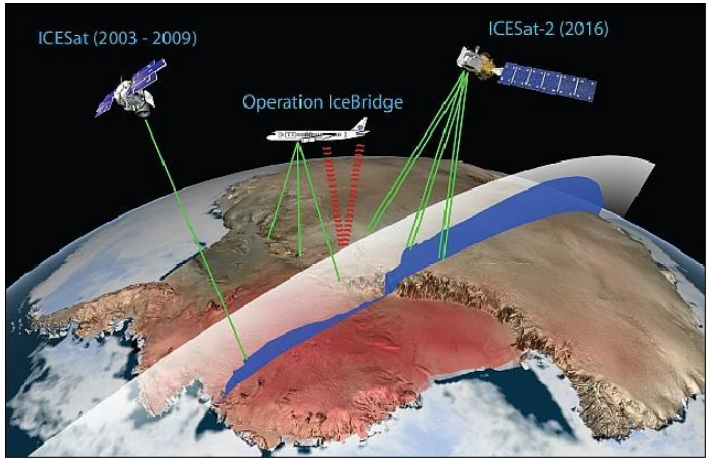

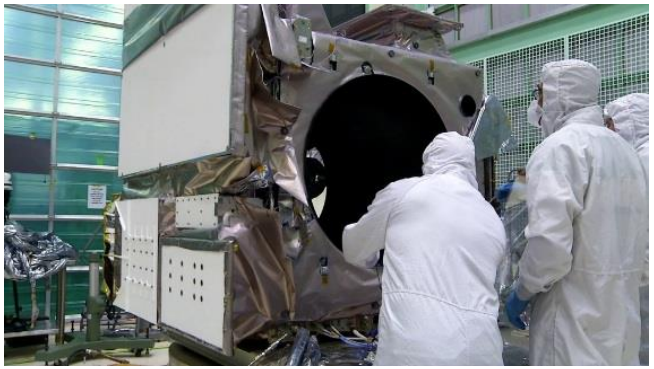

Advanced Topographic Laser Altimeter System

ATLAS

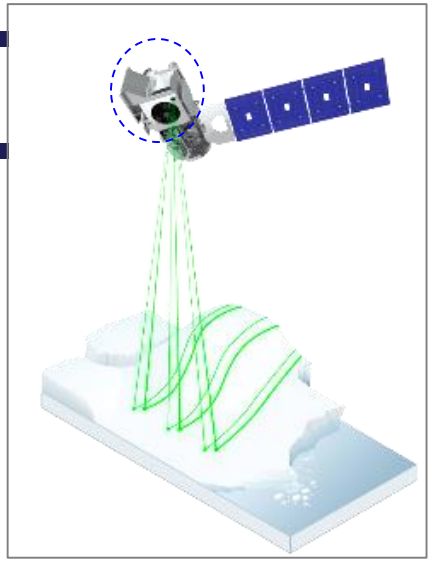

ATLAS Instrument:

- Advanced Topographic Laser Altimeter System (ATLAS)
- Sole instrument on ICESat-2
- Performs laser altimetry
- 1 firing laser beam is split into 6 beams, 3 pairs of strong/weak beams, time-of-flight measured for photons received, provides altimetry data

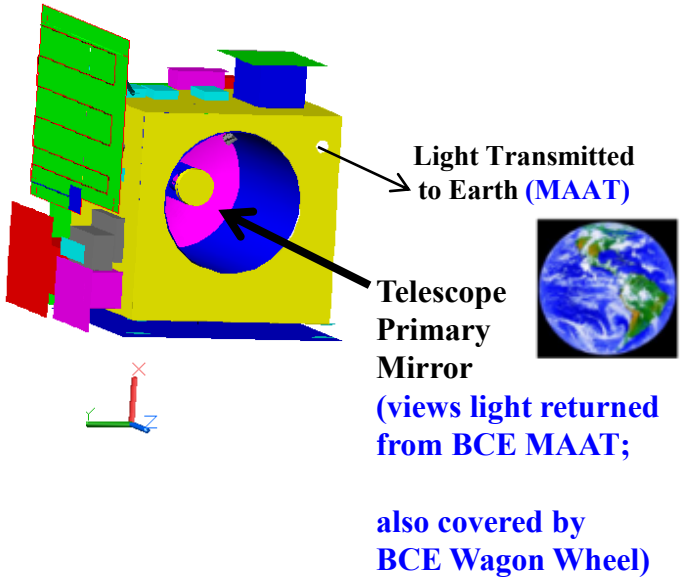

Note: MAAT = Main Alignment / Altimetry Target

Front View

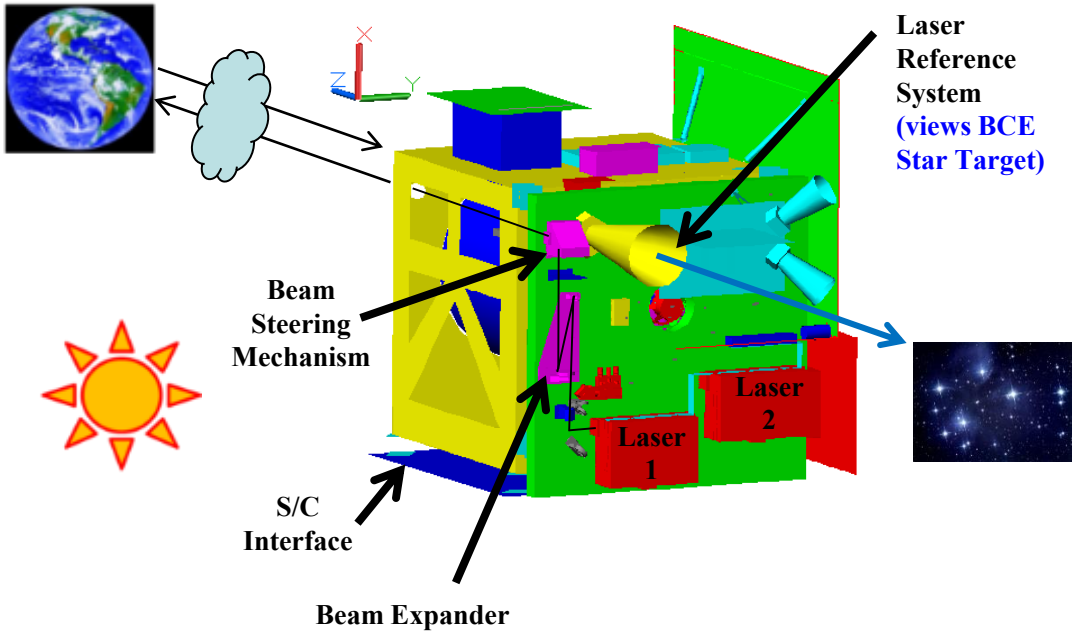

Rear View

Bench Checkout Equipment (BCE)

- Overview
  - Critical GSE for the mission
  - Their purpose is to verify ATLAS is performing well
  - **BCE needs to be as stable as (or more than) the flight hardware in order to verify the flight requirements**
  - Therefore, careful attention was paid to the BCE's thermal design, development, and component-level Tvac testing prior to its use in instrument-level and spacecraft-level Tvac tests with ATLAS

- Wagon Wheel
  - **Stray light block**
  - **Thermal balance** target (cold plate)
  - "**Showerhead**" optic; allows diffused light to be injected into the telescope to stimulate the detectors

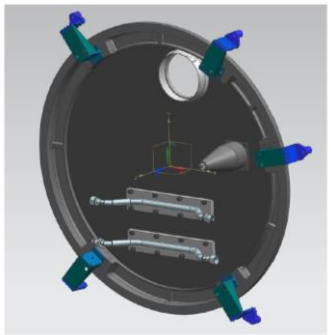

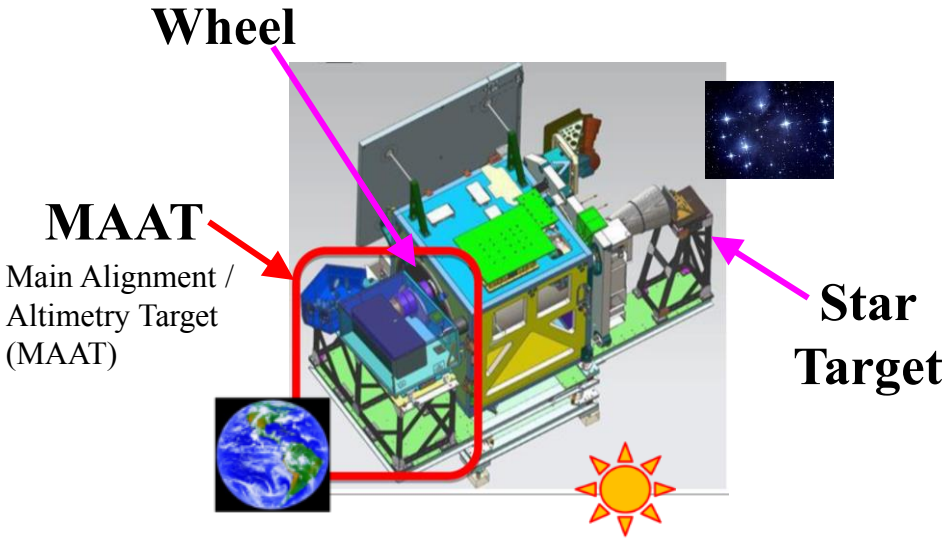

- Star Target
  - **Simulates a constellation of stars**
  - Used to test ATLAS Laser Reference System (LRS)
    - LRS has 2 cameras, 1 looks at earth, and 1 looks at the stars
    - In flight, LRS will send images of starfield back to Earth; then processing is done on the ground to derive pointing

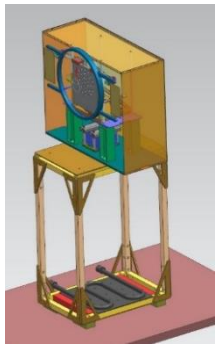

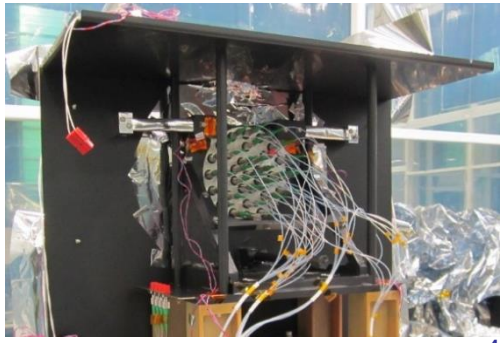

Bench Checkout Equipment (BCE)

- MAAT
  - Main Alignment / Altimetry Target (MAAT)
  - **LTR** = returns light back to ATLAS (**simulates reflection from Earth**); Lateral Transfer Retroreflector (LTR)
  - **Filters** = **simulates signal reduction** in return beam (in flight, signal will be attenuated by **clouds**, etc)
  - **Risley Pair** = motorized optics which steer the return beam; used to correct for any error on the LTR; also used to scan the receiver spot across the telescope, in order to verify that ATLAS is centered on the spots
  - **Camera** = used to perform laser diagnostics on outgoing light

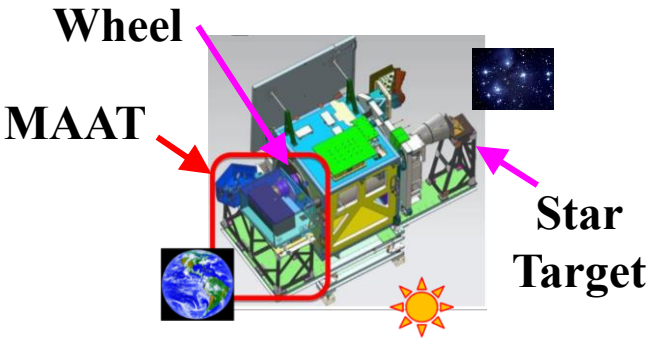

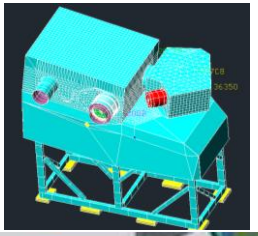

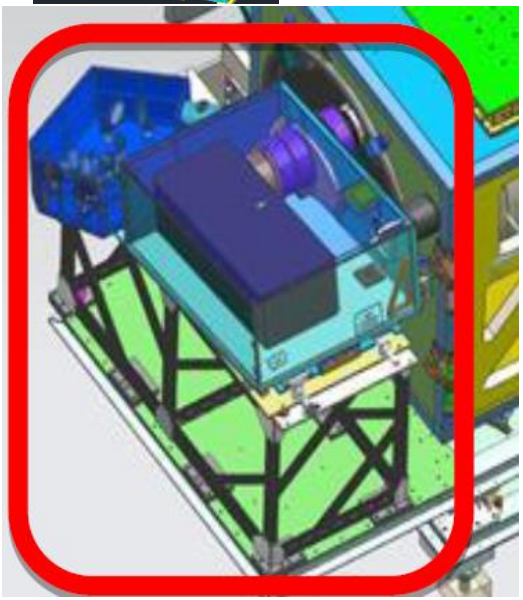

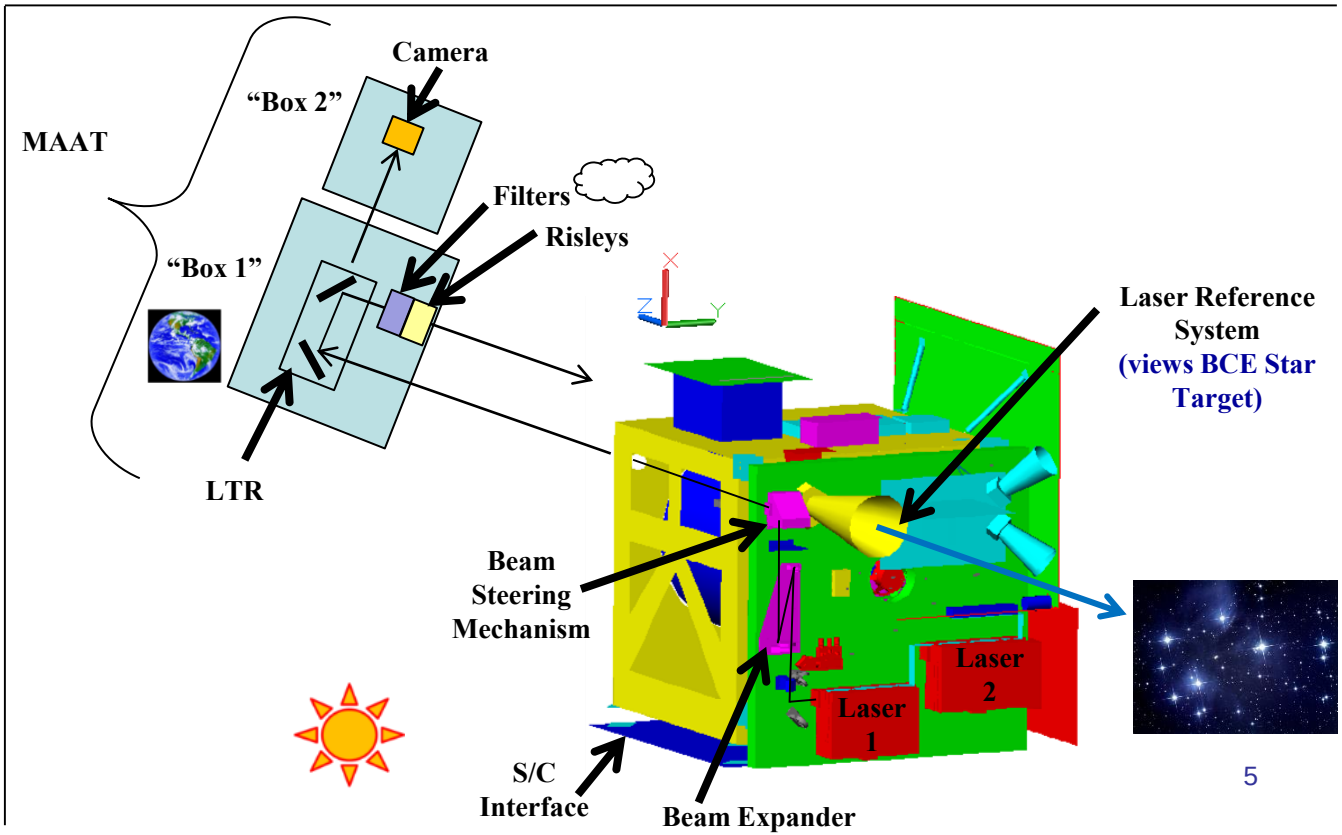

"Wagon Wheel" = Telescope Closeout

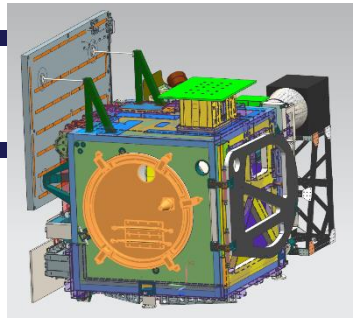

(Purposes: stray light block, thermal target / cold plate, showerhead to inject diffused light to stimulate detectors)

Primary thermal features:

- Heat exchangers, driving temperatures of wheel as thermal target
- Heated optics nearby, affected by heat exchangers
- Titanium flexures, isolates wheel from flight structure

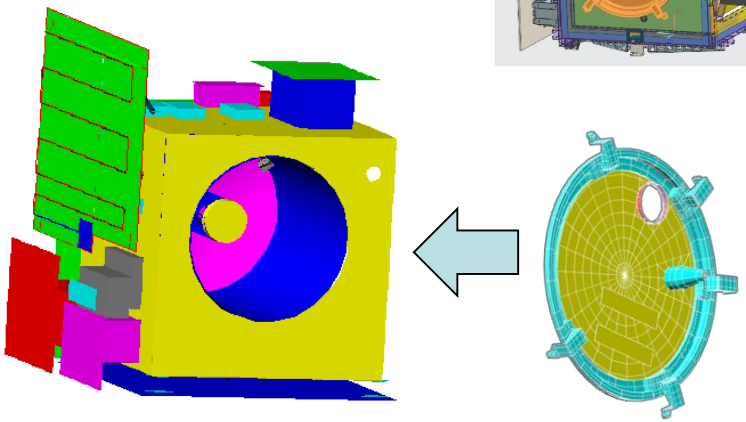

Showerhead
(2 optics, radiative coupling to housing, heater, G10; -30C cold survival limit on optics, -22C optics predict for -10C base and -1C control heater)

Titanium flexures, to minimize heat leak into ATLAS Structure (-35C cold survival limit of ATLAS Structure, setpoint of wheel heat exchangers -100C)

High-emissivity facing inward to telescope (black, to reduce stray light for optics, also high-e to maximize radiative heat transfer to telescope)

Low-emissivity facing out (minimize radiative heat loss)

Heat exchangers, serve as thermal target (e-graf i/f material; setpoints range from 58C to -100C)

Light block around rim (black film)

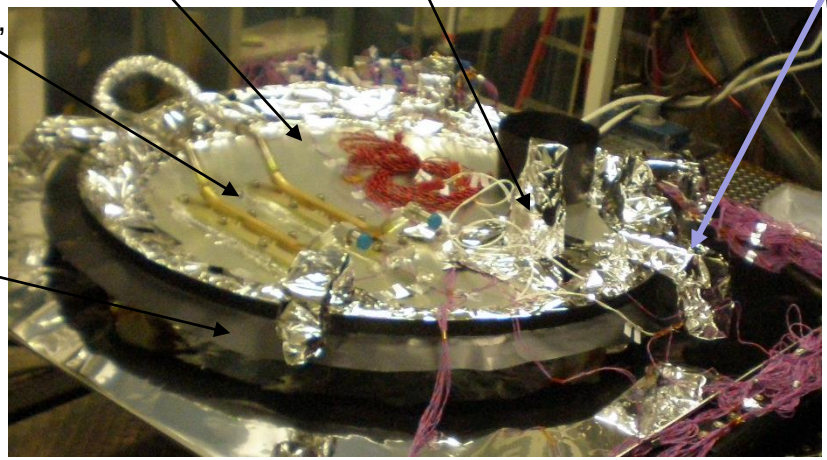

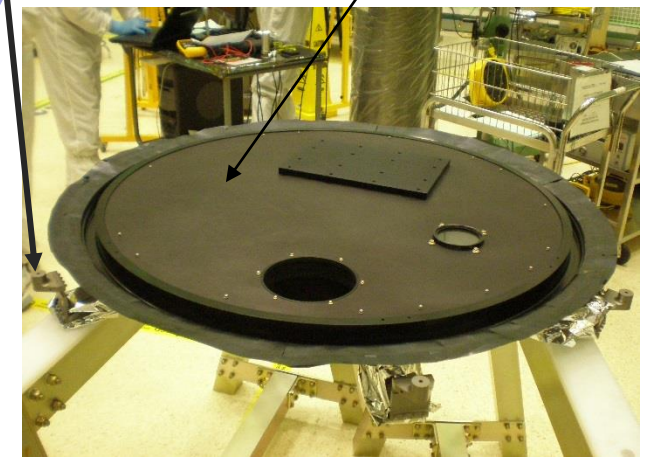

Showerhead

- Temperature Limits
  - Initially, “none”
- CTE Concerns
  - Verify by analysis that transient growth/shrink due to CTE mismatch between aluminum housing and glass will not crush the optics going cold, or pull away going hot
  - Note: optics held in place with little contact area, primarily radiation coupling to housing, optics lag housing temperature
  - Result: Analysis indicates max predicted d(dL) is within mechanical tolerances

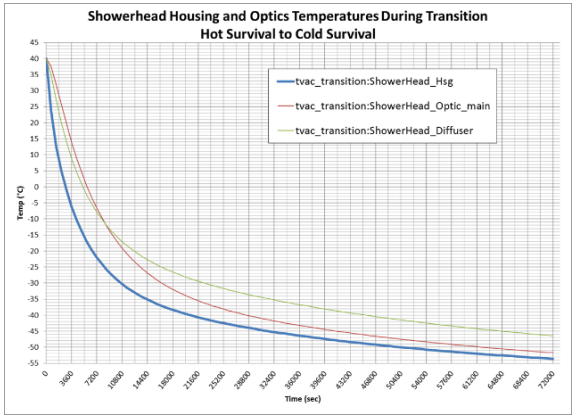

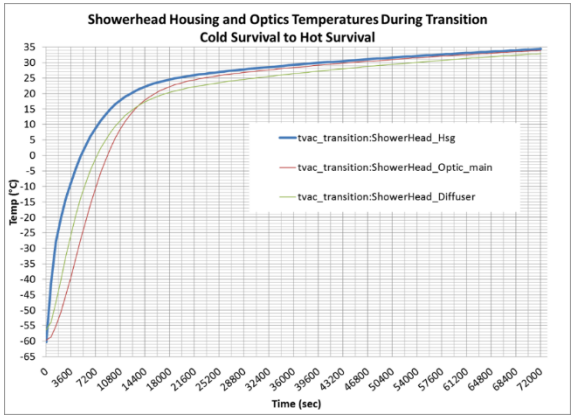

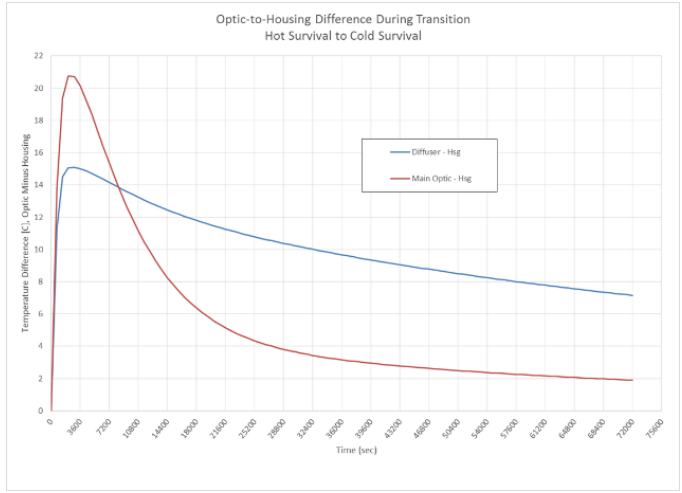

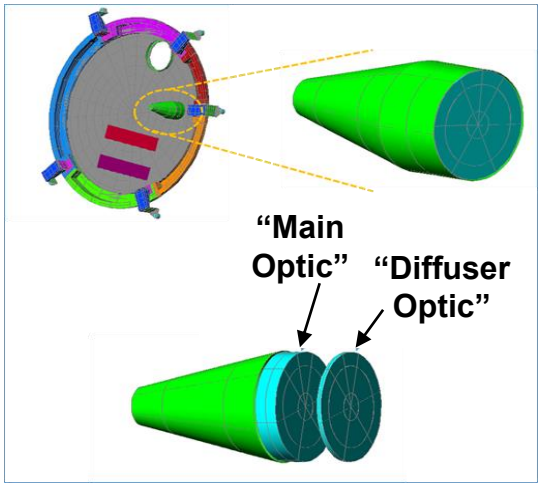

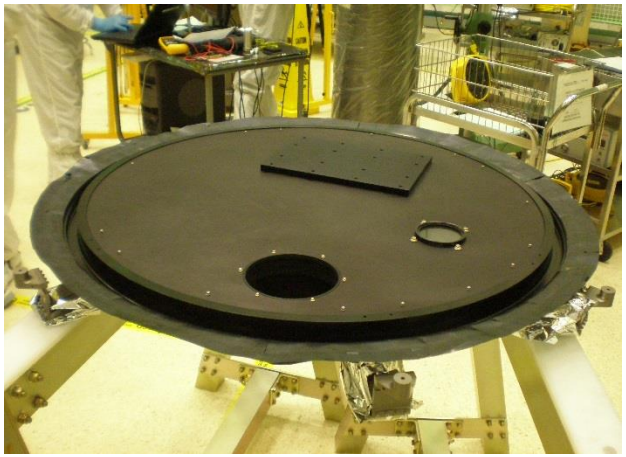

Showerhead

- Temperature Limits
  - Late-breaking news: the optics have limits, -30C to +120C
- Actions:
  - (Hardware already built)
  - Added heater, sensors, blanket
  - Added thin G10 (limited height available, constrained by existing parts)
  - Performed analysis to derive heater setpoint to keep optics above limits, with margin (goal -20C optics). Found that, approximately:
    - Heater setpoint -1C
    - Yielded showerhead flange temperature -10C
    - Which resulted in inner optics temperatures -20C
  - Identified heater (-1C) would be fighting against nearby heat exchanger (-100C), ensure ample power margin
  - Accept non-isothermal target for Balance (view to telescope, hotspots on wheel; large gradient on wheel, but fortunately negligible gradient induced on telescope)

Sample case:

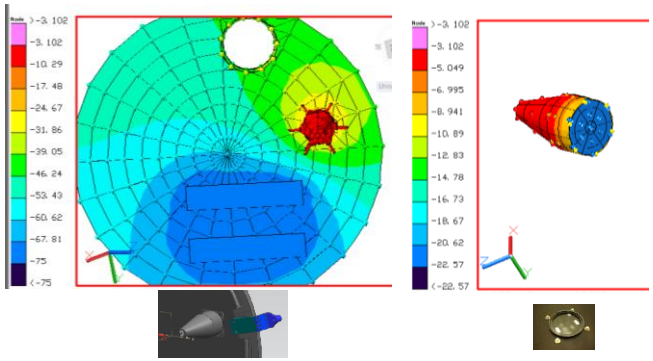

Lesson Learned:

- **For GSE (non-flight), it can be difficult to obtain Tvac temperature limits (or even power dissipations) for off-the-shelf and/or legacy components; continue asking team and/or vendors and remind them of extreme tvac temperatures (-120C to 60C for shroud/wheel)**
- **Anything going into the chamber during Tvac needs to have temperature limits**

Wagon Wheel & Flexures

- Structural
  - The wheel is the only piece of BCE equipment that makes **structural** contact with flight hardware (loading)
  - Performed Structural-Thermal analysis (S-T of STOP) to verify loads entering ATLAS flight structure would be acceptable
- Thermal
  - Heat leak into flight hardware affects **thermal** balances and flight model correlation
- Flexures
  - The 5 flexures attaching wheel to ATLAS Structure are key to both S-T analysis and Thermal leaks
  - Goal: Find a way to represent/model them thoroughly, without significantly impeding model runtimes
- Lesson learned:
  - Make standalone TD file of complex geometry (flexure) with a plethora of nodes, derive an equivalent thermal conductance (G) and use in model (demonstrated on next slides)

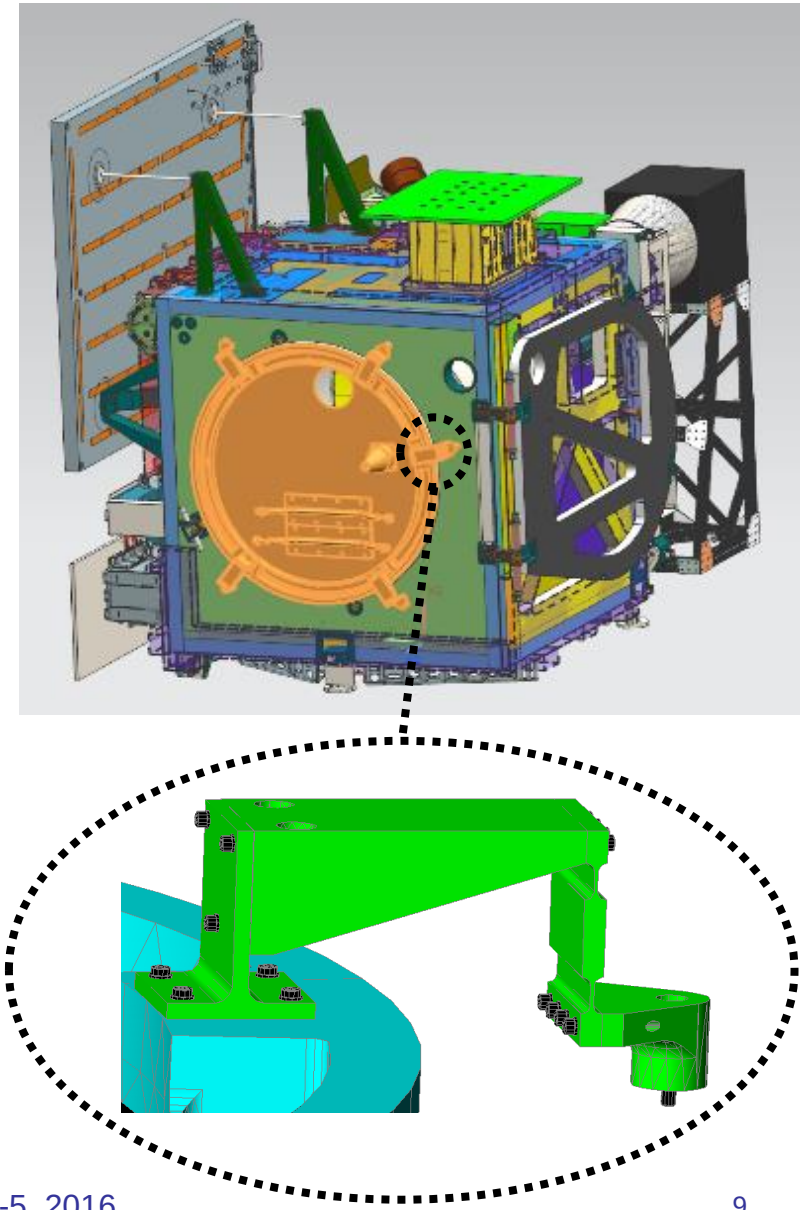

Modeling Titanium Flexures

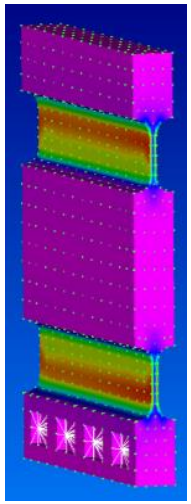

Structural Model

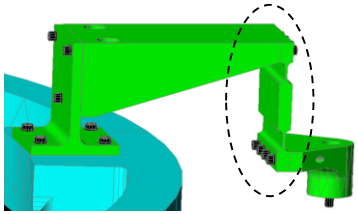

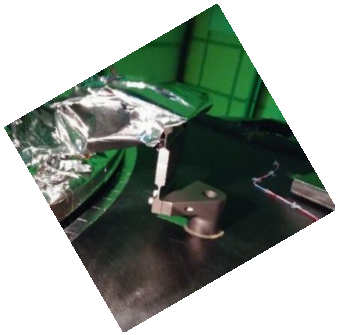

Standalone Thermal Model:

Q = 1W (heatload)

T_{hot} = X
(1, solve with TD)

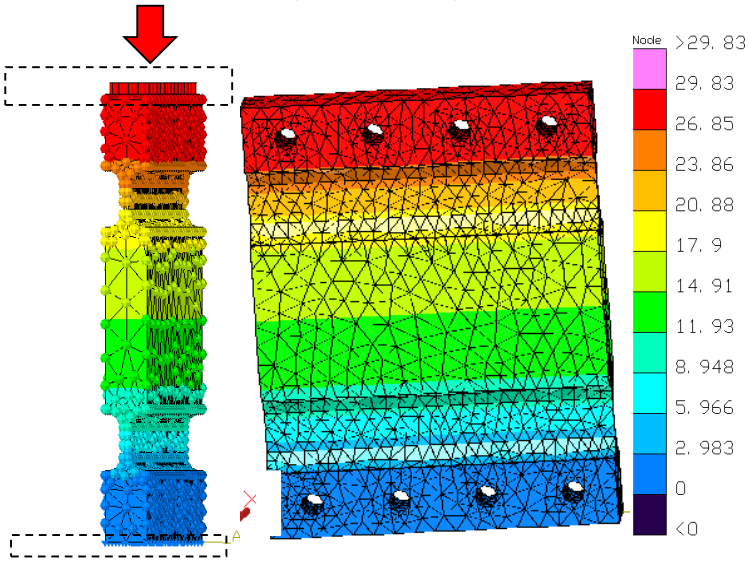

T_{cold} = 0C
(boundary)

1) Solve for T_hot, using standalone Thermal Desktop Model:
Q = 1W ← heatload applied at one end (top)
Tc = 0C ← boundary nodes at other end (bottom)
Th = X = 29.8 C ← solved from standalone TD model
Note: conduction-only TD model, disabled radiation (in order to back out an equivalent G value)

Context/Motivation:

- Critical heatflow path into flight hardware
- Used for temperature predictions, verify Wheel does not cause ATLAS structure to exceed temperature limits
- Used for S-T analysis, structural loads from Wheel into ATLAS

Goals for Modeling:

- Preserve accuracy (conduction and radiation heat exchange)
- Reduce number of nodes and runtime

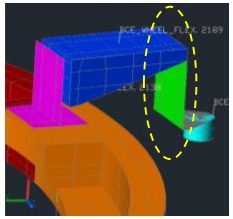

Modeling Titanium Flexures

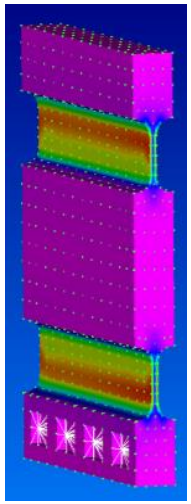

Structural Model

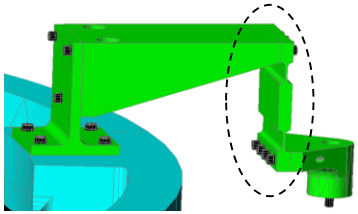

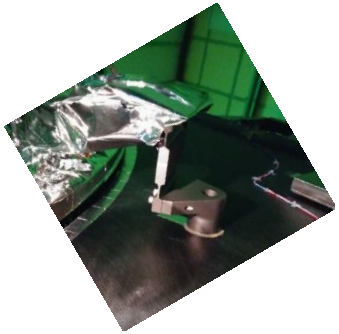

Standalone Thermal Model:

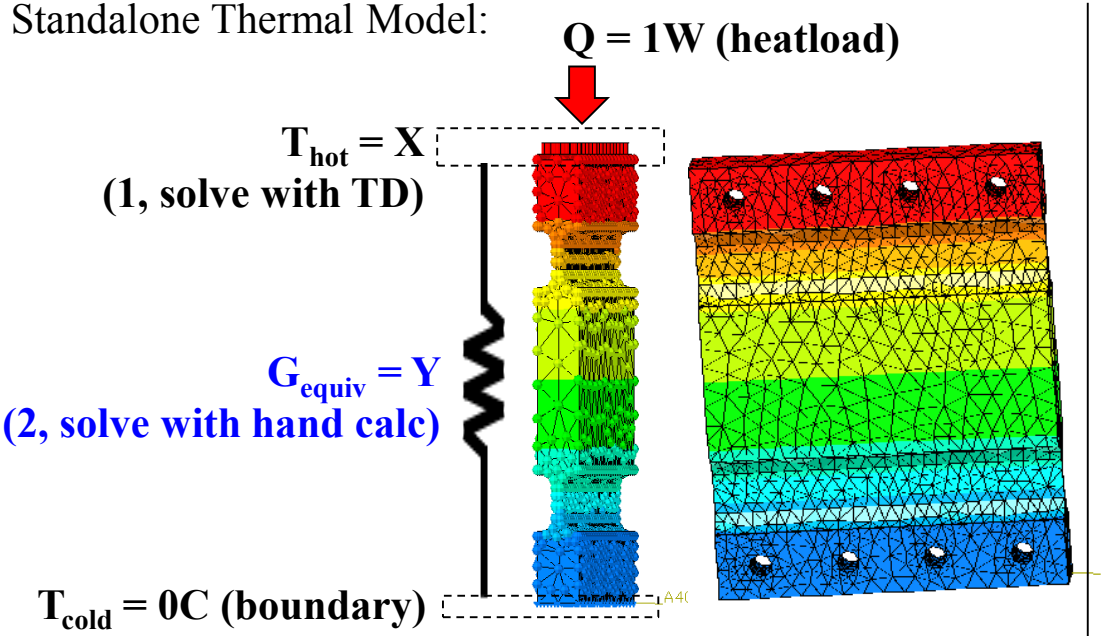

1) Solve for T_hot, using standalone Thermal Desktop Model:
Q = 1W ← heatload applied at one end (top)
Tc = 0C ← boundary nodes at other end (bottom)
Th = X ← solved from standalone TD model

2) Substitute in Th, solve for G_equiv:
Q = G*(Th – Tc)
G = Q / (Th – Tc) = G_equivalent = 0.033 W/C

Context/Motivation:

- Critical heatflow path into flight hardware
- Used for temperature predictions, verify Wheel does not cause ATLAS structure to exceed temperature limits
- Used for S-T analysis, structural loads from Wheel into ATLAS

Goals for Modeling:

- Preserve accuracy (conduction and radiation heat exchange)
- Reduce number of nodes and runtime

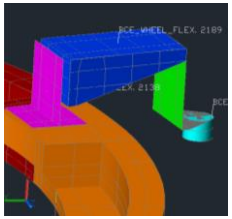

Modeling Titanium Flexures

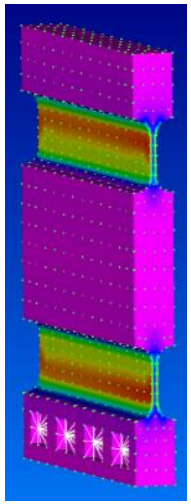

Structural Model

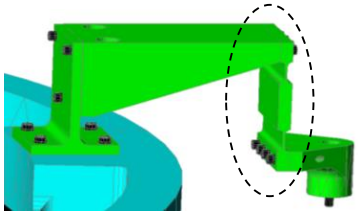

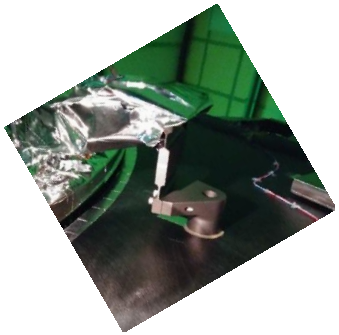

Standalone Thermal Model:

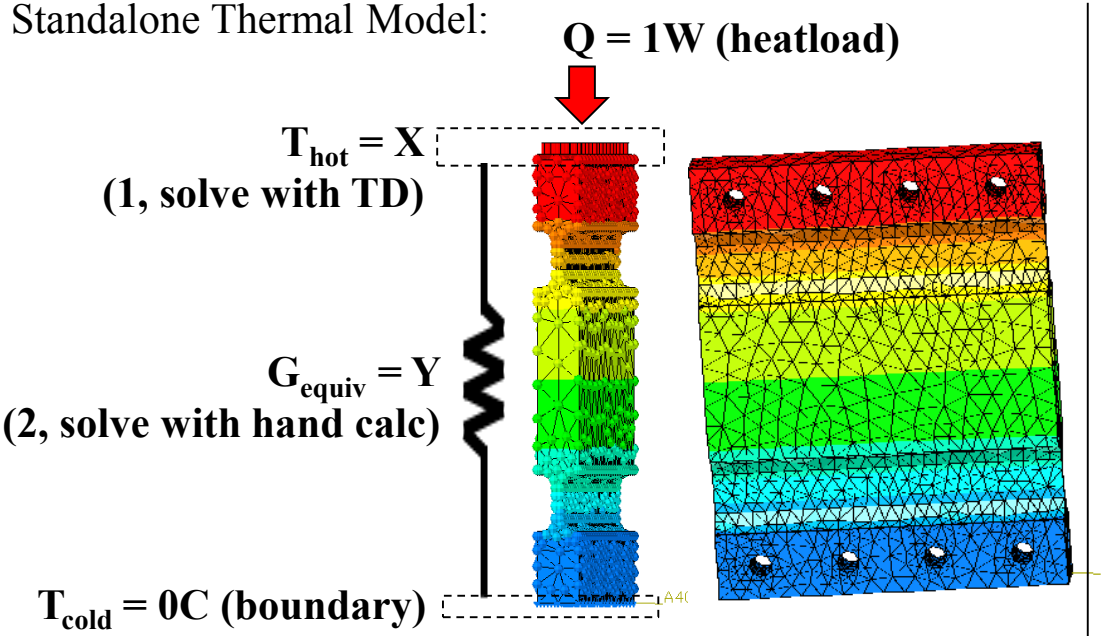

1) Solve for T_hot, using standalone Thermal Desktop Model:
Q = 1W ← heatload applied at one end (top)
Tc = 0C ← boundary nodes at other end (bottom)
Th = X ← solved from standalone TD model

2) Substitute in Th, solve for G_equiv:
Q = G*(Th – Tc)
G = Q / (Th – Tc) = G_equivalent

3) Substitute G_equiv, solve for equivalent thickness:
G = k*A/L = k*t*W/L
G_equiv = k * t_equiv * W / L
t_equiv = G_equiv * L / (k * W)

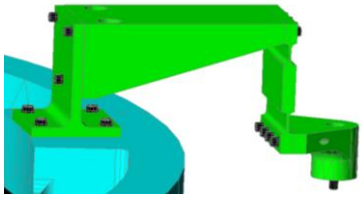

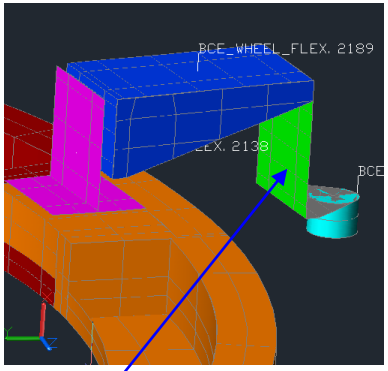

Simplified geometry for Ti flexure, using derived equivalent thickness. **(Reduces # of nodes, and runtime, preserves accuracy of thermal isolator)**

Wagon Wheel

- Design changes
  - Showerhead temperature limits
  - Crane lift points
- Crane lift points
  - Requirement added Post-Tvac, to add crane lift points
  - Hardware nearly installed on thermal/structural isolator without knowledge of thermal (thankfully they asked to open the blankets, thermal agreed but asked why, and learned of the proposed hardware change)
  - Large aluminum blocks mounted to Titanium flexures
  - **Hand calcs indicate it would have**
    - **increased conduction by 23%**
    - **increased radiation by 53%**
    - on 2 flexures, if these were installed
  - Temperature limits of nearby flight ATLAS Structure previously had little margin to cold survival limit (-35C), due to Structure's heat loss to cold (-100C) wagon wheel
  - **Realized in time to remove them prior to Tvac**

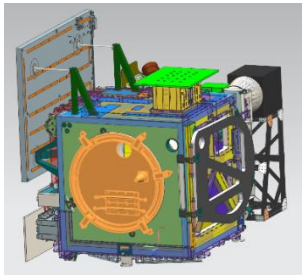

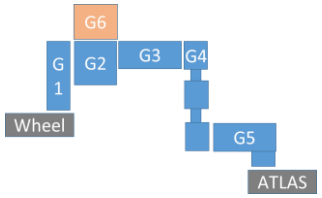

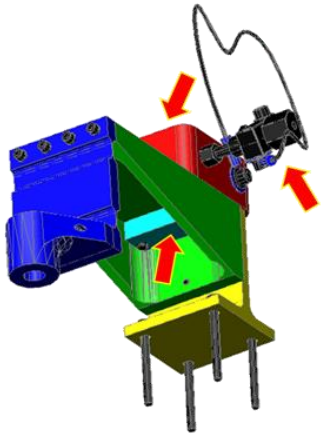

3 additional parts, temporarily installed on flexure

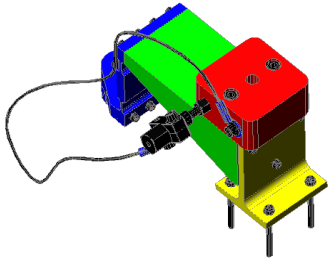

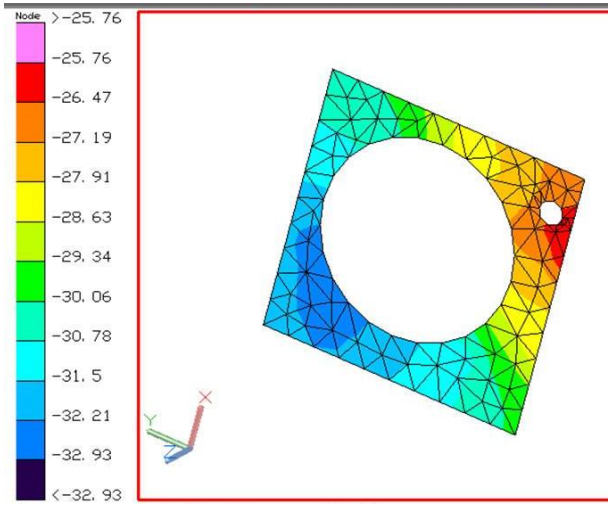

Wheel ranges from -100C to 58C. Early predictions of ATLAS Structure (to which the Wheel bolts) indicated -33C on Flight Structure near wheel flexures. Cold survival limit was -35C. Sensitive interface, compromising 20%-50% of the isolator was not desirable; removed blocks before tvac.

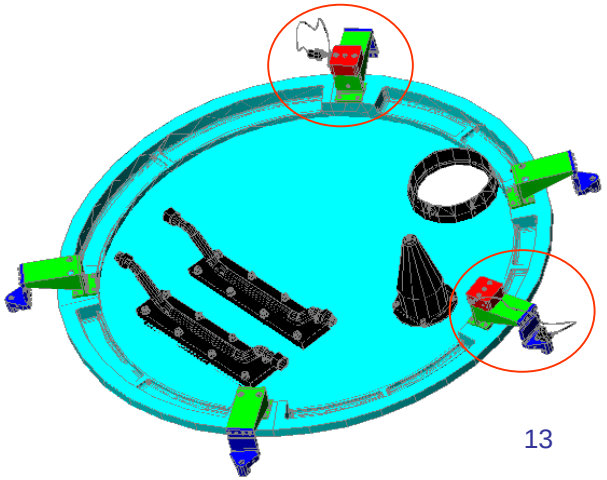

To Correlate or Not to Correlate? And STOP?

Model Correlation

- Flight Model
  - Always correlate
- When to correlate a GSE model
  - If it will be touching flight hardware (Wheel)
  - Appreciable conductive or radiative heat exchange with flight hardware that would affect flight model correlation
  - Examples
    - Wheel has direct conductive path to ATLAS; Correlate
    - MAAT has *large radiative view factor but is blanketed* and controlled to 20C, changes in MAAT model would have minimal affect on ATLAS flight model correlation, no need for MAAT to be correlated

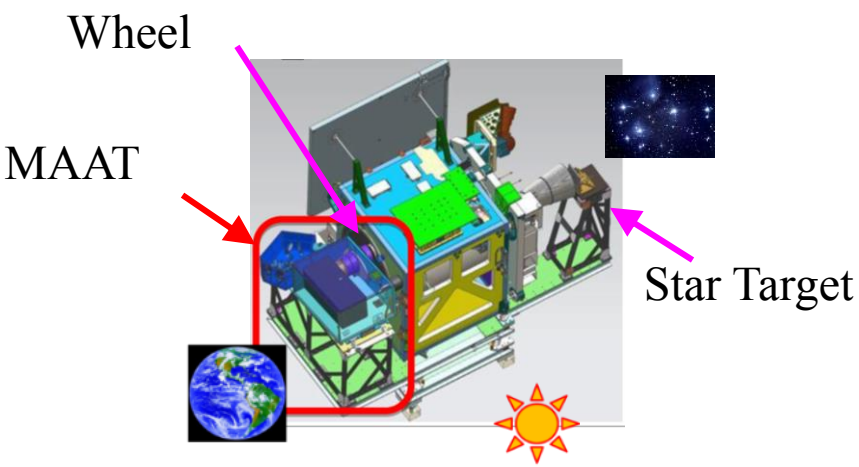

STOP Analysis

- Flight Model
  - If it is alignment sensitive (ATLAS Optical Bench)
- When to perform STOP for a GSE model
  - S-T analysis (thermal distortion)
    - Touching flight hardware, imparting structural loads (Wheel)
  - STOP analysis
    - If it is alignment sensitive (MAAT)

BCE Components Example:

	Correlate?	STOP? S-T? None?
Wagon Wheel	Yes	Yes, S-T
	(Heatflow path directly into flight hardware; this GSE model would affect flight model correlation)	(Structural loads directly into flight hardware)
MAAT	No	Yes, STOP
	(Not touching flight hardware)	(Alignment-sensitive)
Star Target	No	No
	(Not touching flight hardware)	(Not alignment-sensitive)

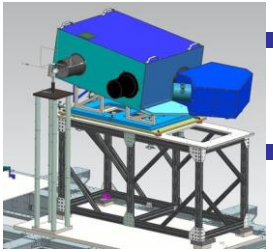

MAAT: Heaters and Thermal Design

- Heaters on "Box 1"
  - LTR gradient limit < 2C
  - LTR goal temperature 20C (range 15 to 26.5C)
  - Primary goal = null gradients, evenly heat the oven
  - Rather than select identical heaters,
    - Chose to size heaters for maximum real estate (less gradient on substrate between heaters; max heater size driven by bolt hole locations and 4x12" max dimensions recommended for applying PSA heater to avoid bubbles during application)
    - Calculated resistance needed to achieve uniform watt density (identical flux applied on all heaters)
    - Pro: Method worked well for nulling gradients
    - Con: Calculation-intensive for modeling and making any changes to the circuits (identical heaters in parallel are much easier to calculate than unique ones)
- LTR
  - Used VDA on 3 sides of LTR to further null gradients
- Risleys
  - Note: Risley optics dissipate within a Titanium housing; to remove the heat, covered Ti with 3 layers copper tape (max before adhesive layers impede conduction), and 1 outer layer of black kapton tape (to radiate some of the heat away); successful approach, Risleys did not overheat in tvac

"Box 1"

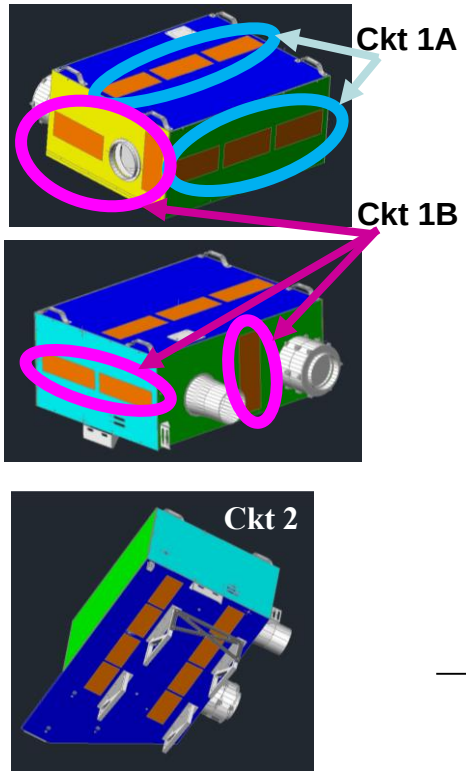

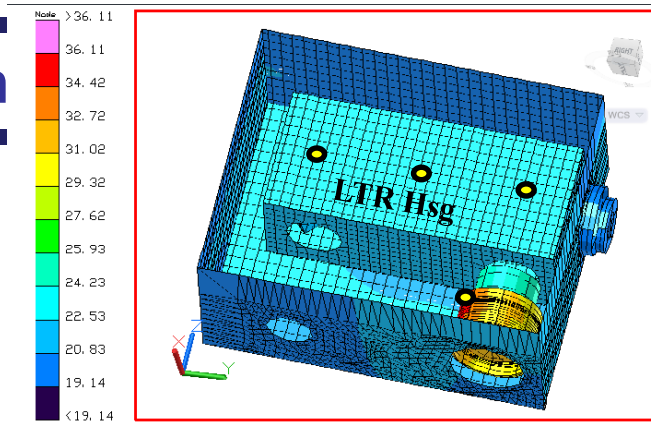

Temperature [C], Time = 0 sec

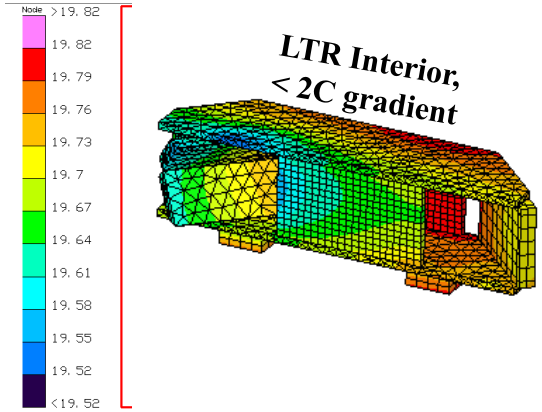

LTR Hsg

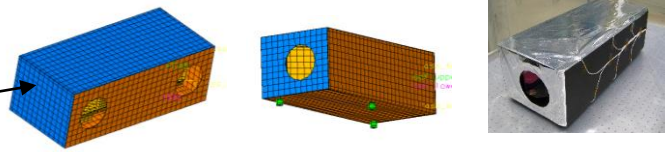

Blanket on 3 sides to reduce gradient

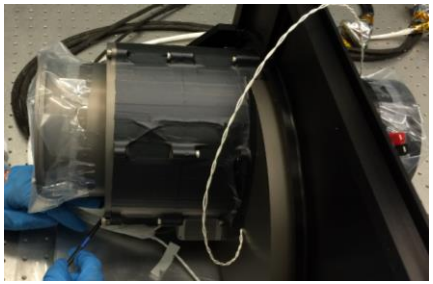

Risleys

3 layers Cu tape (conduction)
+ 1 (outer) layer black kapton (radiation)

MAAT: Heaters and Thermal Design

- Heaters on "Box 2"
  - Maintain internal optics at 20C (oven), with shroud at -120C
  - Prevent integrating sphere from overheating: covered with black kapton tape, to radiate heat from 9W of laser power
  - Prevent camera from overheating (copper strap)

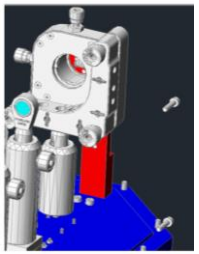

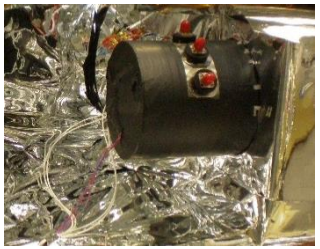

"Box 2"

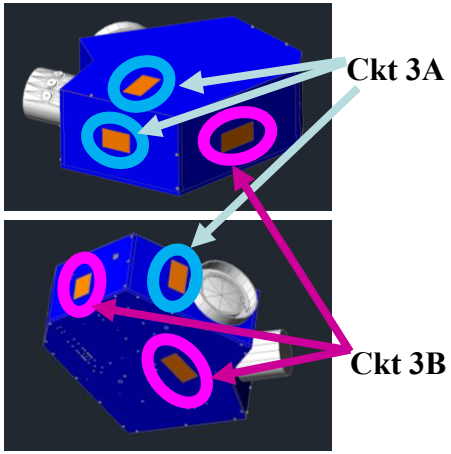

- STOP Analysis → Heaters on Adjustment Stage
  - Structural/Optical goal: Maintain pointing and alignment, avoid tilt of stand due to CTE effects
  - Prior to heating the adjustment stage, gradients and CTE effects caused exceedance of structural and optical alignment requirements
  - Heating the Adjustment Stage solved this

"Adjustment Stage"

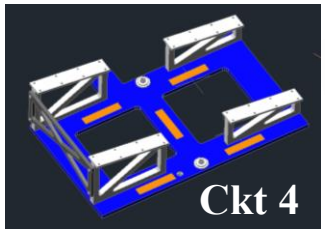

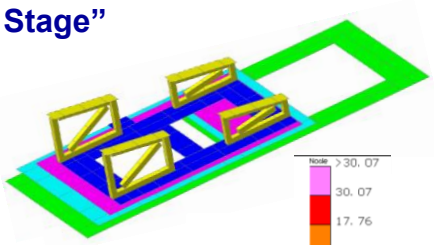

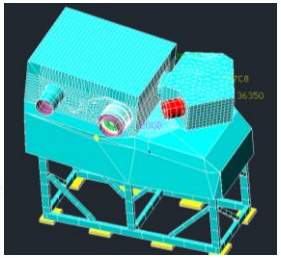

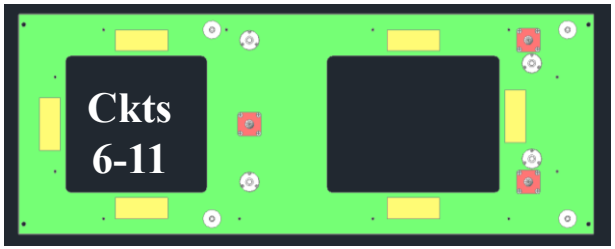

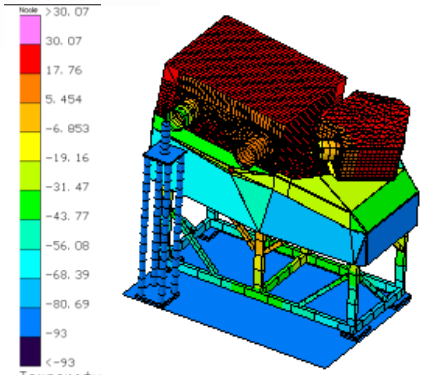

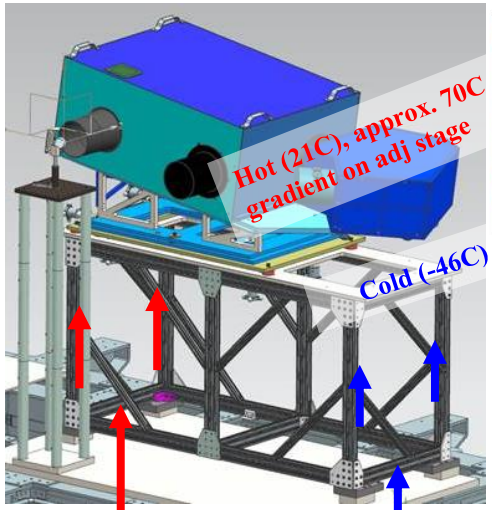

Prior to heating the adjustment stage…

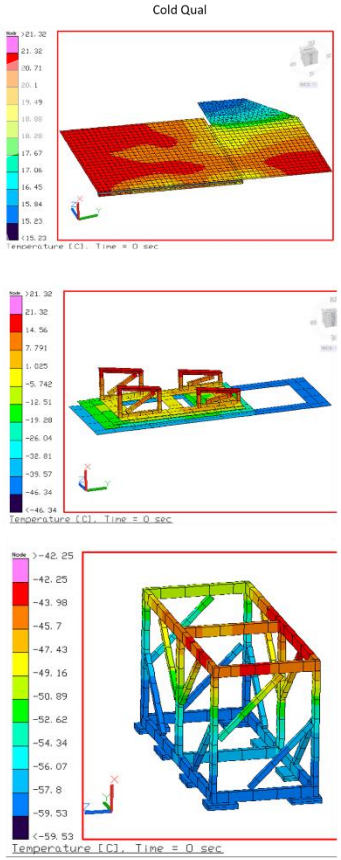

MAAT Harnessing Qleaks

- Heat Leaks → Blanket (and/or heat) the harnesses!
  - Not enough heater ckts available for zero Q (in this case)
  - Harnesses not modeled (see lessons learned below)
  - Connectors & Copper ground straps
- Lessons learned
  - Don't assume the harnessing is negligible
  - Sheilding can roughly double the G, compared to purely looking at conduction through the wire gauge diameter
  - If the harness has both inner and outer shielding, then a conservative approach can be to assume 3x the G (1 for wire gauge, 1 for inner shield, 1 for outer shield)

<u>Levels of action to take, for harnesses:</u>

1. Hand calc (minimum)
   - Look at the harness drawings, count the number of wires and their gauges, and whether they have shielding, do hand calc; don't assume that 100% margin is enough (especially if total Q needed was initially ~8W)
2. Blanket (calculate min length needed)
3. Zero-Q heater

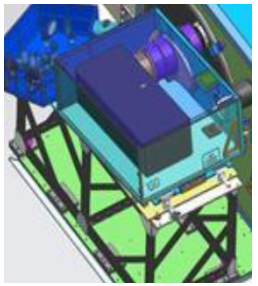

Mechanical Model

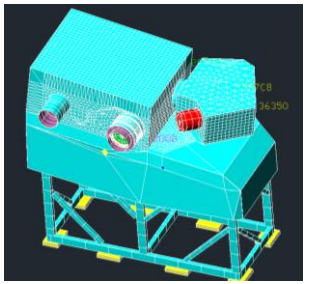

Thermal Model

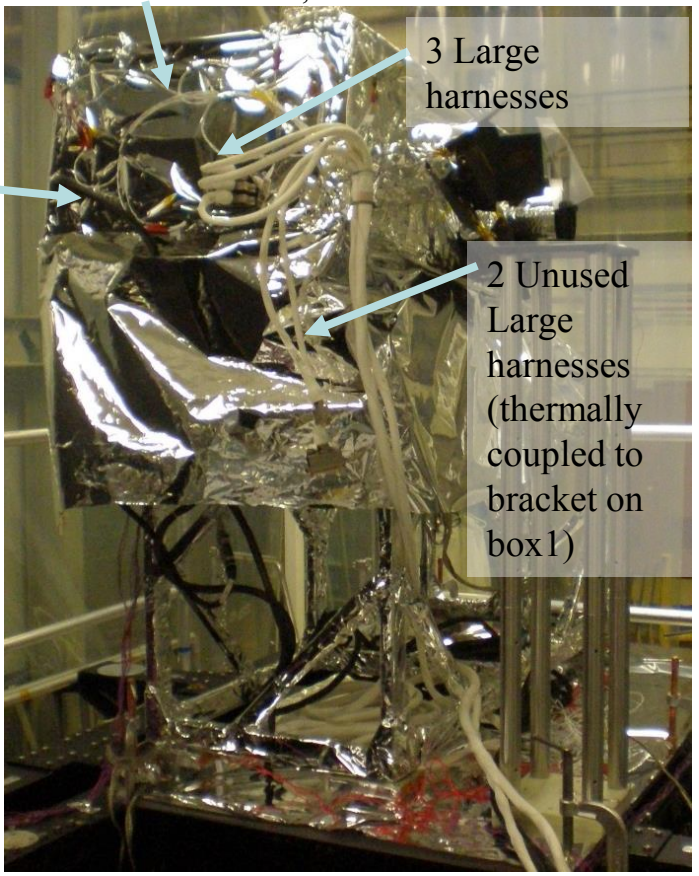

Real Life

MAAT Harnessing Qleaks

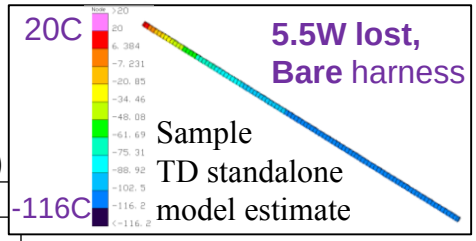

Thermal Desktop: Ballpark Estimates from Standalone Harness Model (Sample Cases, with Conduction and Radiation)

	Qmin	Q max		Q w/ **Blanket**	Q w/ **Blanket**	Notes:
Example:	small harness	large harness		large harness	small harness	
T_hardware [C]	20	20		20	20	<-- TD boundary at 1 end of harness (other end floats)
T_shroud [C]	-20	-120		-120	-120	
Wires	**14 wires @22 gauge**	30 wires @ 22 gauge		30 wires @ 22 gauge	14 wires @ 22 gauge	(Note: 22 gauge wire has 0.0254in diam.)
d_radiate [inches]	**0.5**	1		1	2 (incl. blanket)	
A_copperForCond [in^2]	0.0071	0.0152		0.0152	0.0071	
Area multiplier for shielding	1	3		3	2	<-- Approximation: 1x = no shielding, 2x = single layer, 3x = inner and outer shielding
L harness	3ft	6ft		6ft	6ft	<-- **radiate and conduct for this length**
Emissivity	0.8	0.8		**0.05**	**0.05**	<-- assume bare wire (0.8), blanket (0.05)
Q from TD model [W]	**0.7**	**5.5**		**1.3**	**1.1**	

Note: Q includes conduction down wire and radiation from wire out to shroud

Model results estimate that a Bare harness could radiate as much as 5.5W; blanketing that same harness would reduce it to 1.3W. Recommend blanketing harnesses.

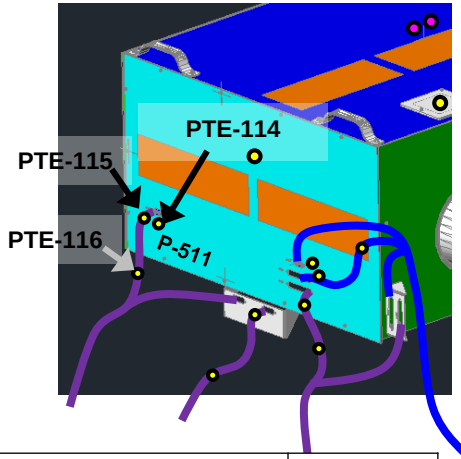

Tvac Data:

Approx. 1 to 2W lost from sample blanketed harness in Tvac (variation dependent on assumptions made for G)

Tvac Temperatures with Blanketed Harness

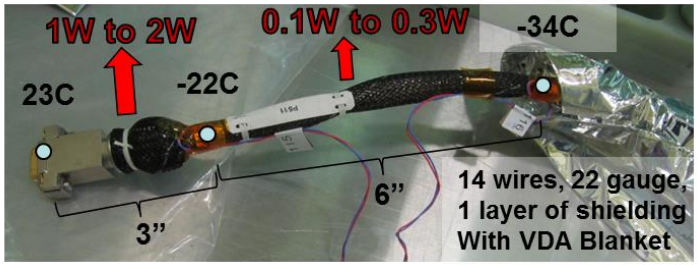

	Temperatures Measured in later Tvac, with blanketed harnesses			Estimate G, Vary assumptions for shielding				Calculate Q Lost
	Th, [C]	Tc, [C]	dT, [C]	L approx., [in]	k*A, [W*in/C] (14 wires, 22 gauge)	M_shield (multiplier used for shielding)	G_total, [W/C]	Q , [W] (**assumes conduction-only**)
First 3" (PTE-114 to PTE-115)	23	-22	45	3	0.0715	1	0.02	1.1
				3	0.0715	2	0.05	2.2
Next 6" (PTE-115 to PTE-116)	-22	-34	12	6	0.0715	1	0.01	0.1
				6	0.0715	2	0.02	0.3

MAAT

- Protecting the Design
  - **It is best to <u>avoid/minimize changes to the hardware post-tvac, when you have a proven design</u> (validated by test)**
  - However, if changes are proposed/made, thermal needs to be aware of them, and verify the design will still work
  - Examples of hardware changes suggested/made <u>post-tvac</u> for BCE:
    - Installation of <u>additional harness bracket</u> (would be a conductive <u>heat leak on gradient-sensitive box)</u>
      - **Thermal Action: advocated alternate way of mounting harnesses (implemented)**
    - Optical metrology hardware added (large heavy bracket)
      - **Thermal Action: hand calc & installed blanket**
    - Crane lift structure (conductive and radiative heat leak)
      - **Thermal Action (in progress): TD model, consider g10 and blankets**
  - **Lessons Learned:**
    - **Hand calc or re-analyze as needed; inform project of thermal impact and suggest alternate idea/mods to preserve thermal design (if applicable)**
    - **Constant communication: Be aware of any changes to the hardware (others may not realize it affects thermal)**

Proposed location of additional harness bracket (at the time, would have been conductive leak from most sensitive heater circuit with least margin)

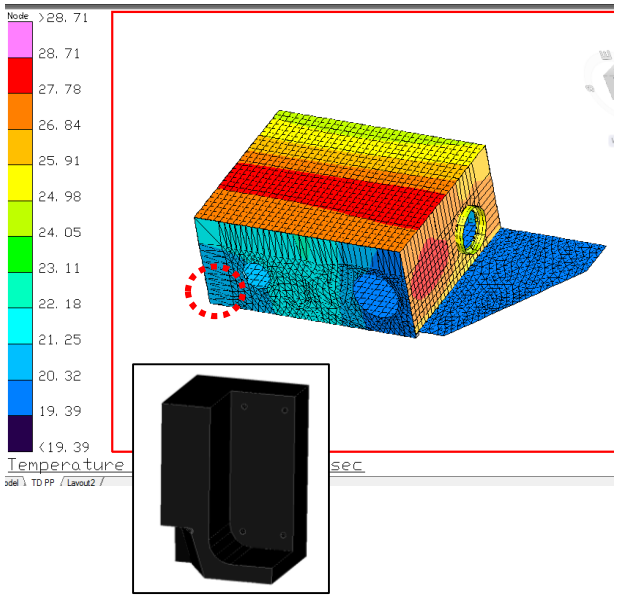

Example of optical metrology hardware added to MAAT

Star Target: Baseline Design

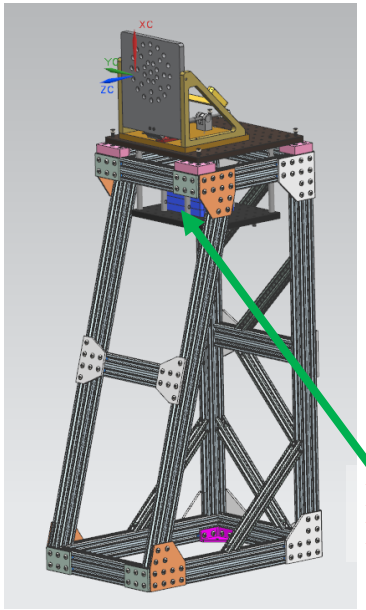

Fiber Splitter Boxes

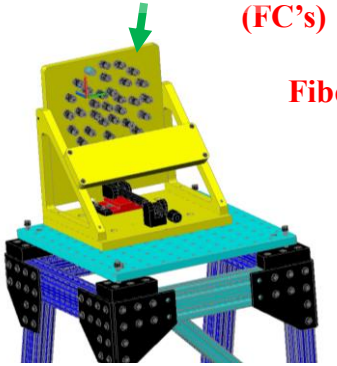

FC Plate

Fiber Collimators (FC's)

Fibers

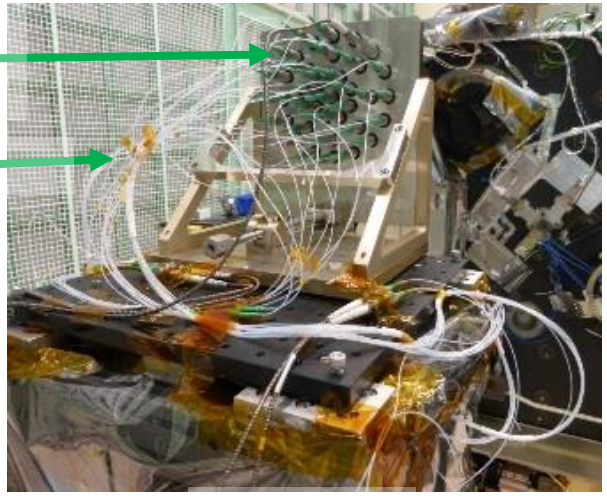

Irridite rear side

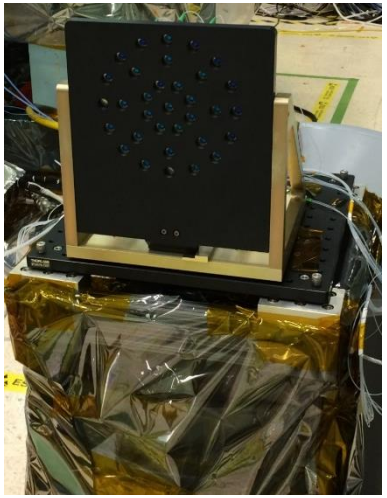

Black anodize front side

- **Baseline Design: 1 limit**
  - Req't
    - Fiber collimators (FC) > -40C
    - 1 heater ckt available
  - Thermal Design
    - 1 heater on FC plate, blankets
    - Requested low-e (irridite) on back of plate (front is black anodize for stray light)

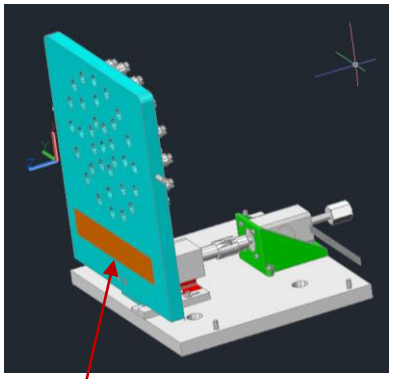

Heater

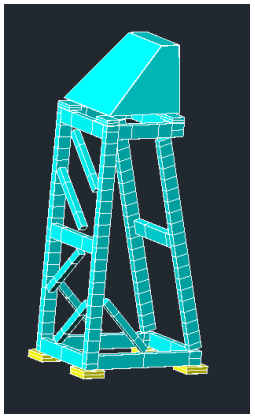

SLI VDA blankets

Predict -25C > -40C limit, 15C margin

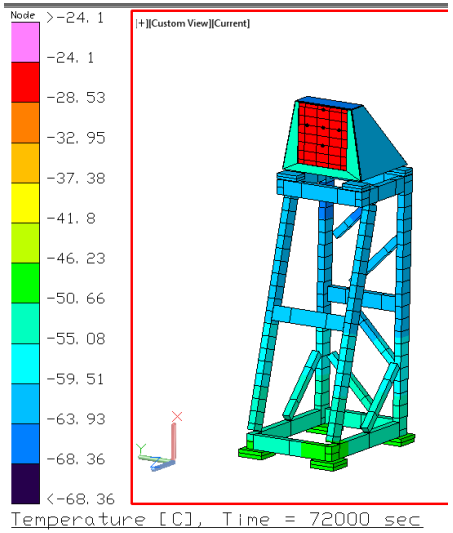

Design Progression

- **Design Change:**
  - Additional Req'ts
    - Need to block stray light from entering LRS Sunshade → Add panel/baffle
    - Blanket should not touch fragile fibers → Add canopy to drape blankets away from fibers
  - Thermal Impact
    - (minimal)
    - Larger radiating area from blankets
    - Larger radiating area near FC plate (designed a minimal conduction path)

New canopy
Existing fiber collimator plate
New baffle

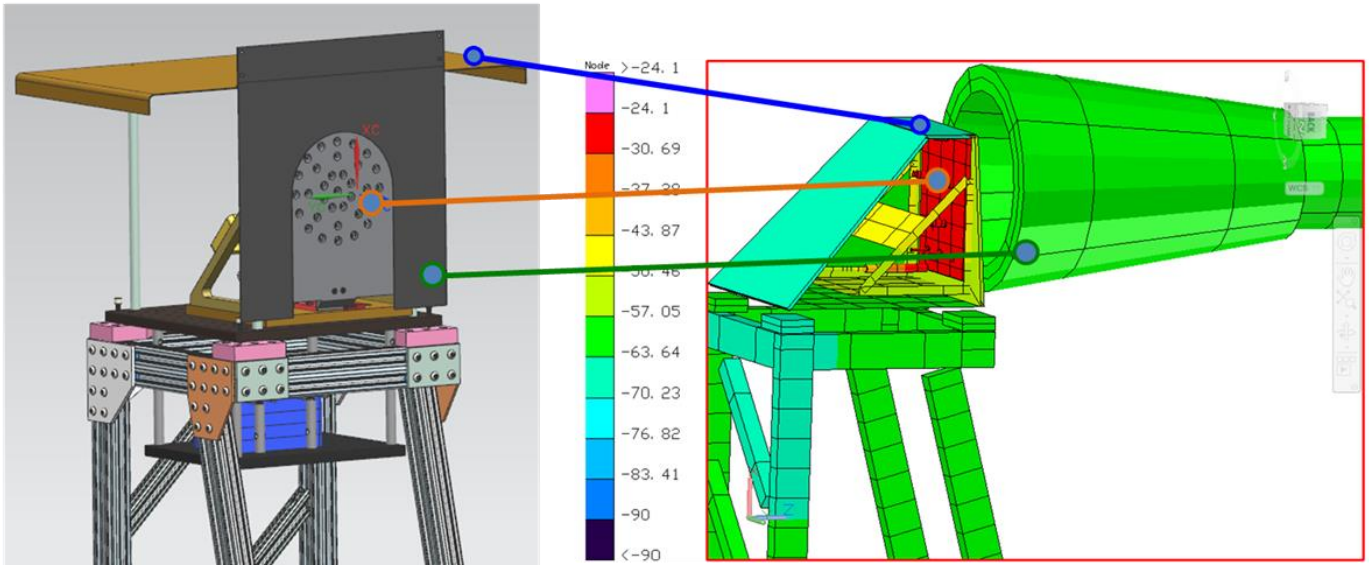

Design Progression

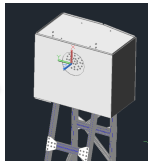

Design Change: More Limits (after most of the HW built)

- Additional Req'ts
  - Connectors for 4 external Fibers (purple) > -40C
  - Connectors for 30+ internal Fibers (white) > -20C
  - Fiber Splitter Boxes (blue) > -20C
- Thermal Impact
  - New thermal design: heated **oven** (instead of heater on FC plate, conduction)
  - **Radiation** not as efficient, but necessary in this case: 1 ckt available for 3 components
  - **Interior coatings (black)** for max heat transfer
  - **Copper straps** to FC plate, epoxy mount to avoid drilling holes in already-assembled optics plate
  - **Disconnects** for each panel (TC's, Heaters), need heater margin and harness wrapping

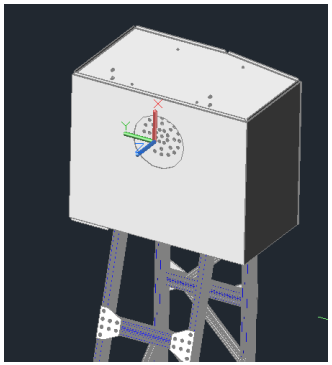

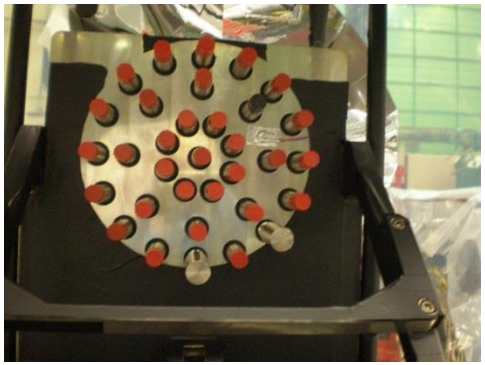

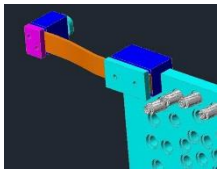

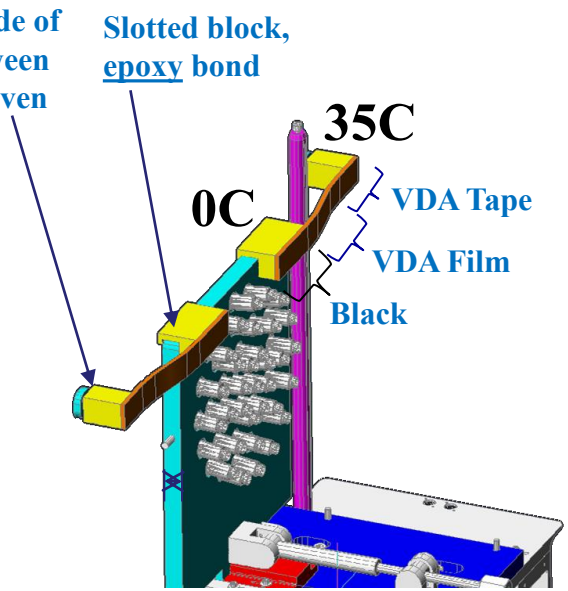

7 identical heaters in parallel:

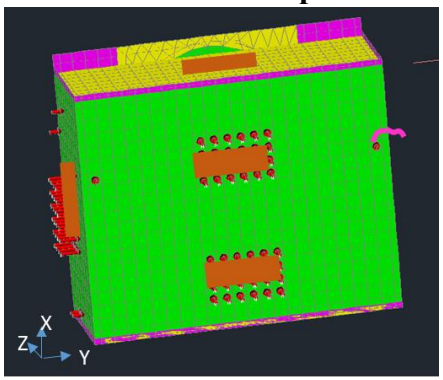

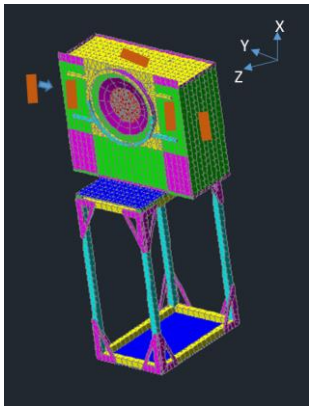

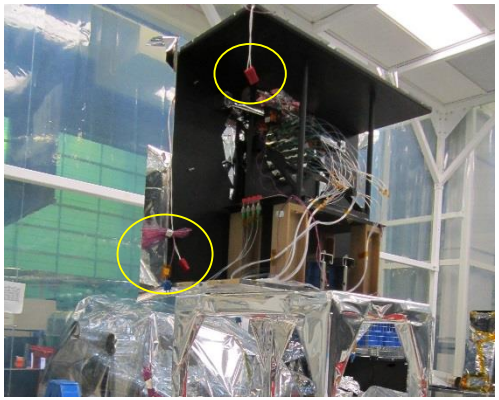

Design Progression

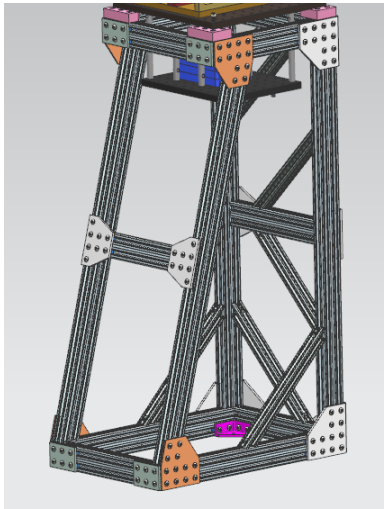

- Design Change: Stand
  - Additional Req'ts
    - Changed stand from 8020 to non-anodized aluminum (after built)
  - Thermal Impact
    - (minimal impact)
    - Analysis to verify heat leak through stand still acceptable

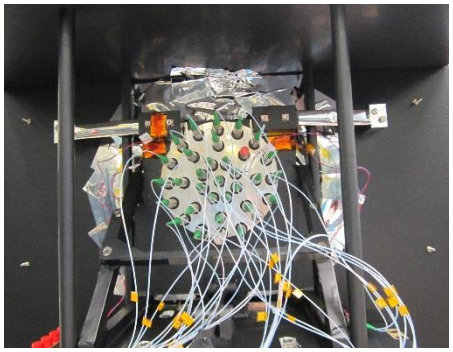

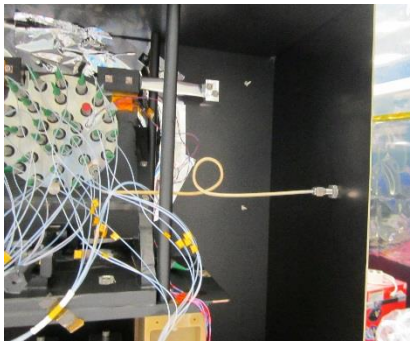

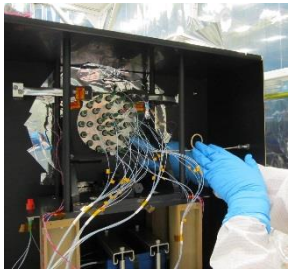

- Design Change: Purge
  - Additional Req'ts
    - Purge line (copper tube) to back-fill ATLAS through Star Target in tvac
  - Thermal Impact
    - (minimal impact)
    - 1 panel no longer removable (informs harness routing)
    - Cu tube acts as (negligible) additional heat strap from heated oven panel to FC plate; model is conservative without it, no thermal analysis required

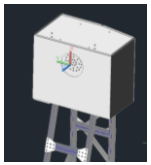

Design Progression

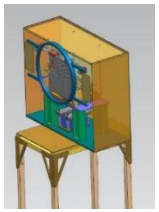

- Design Change: Baffle
  - Additional Req'ts
    - Contamination Baffle, closeout to LRS
    - Larger diameter opening in oven
  - Thermal Impact
    - Redesign heaters to fit new footprint
    - Affects strap endpoint and strap length
    - Annulus blanket to cover large opening (black out, VDA in)

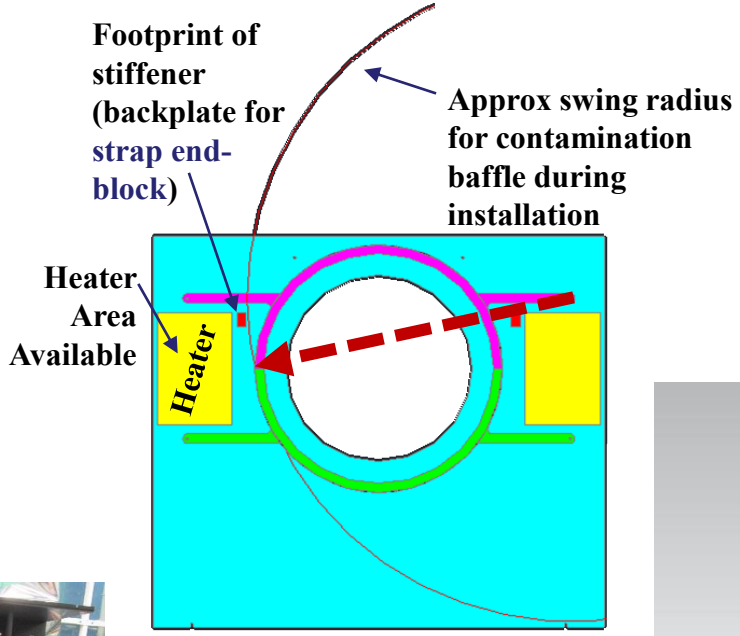

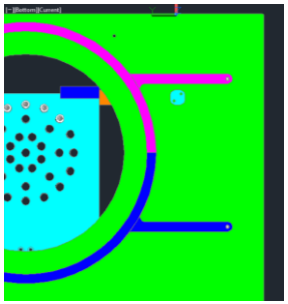

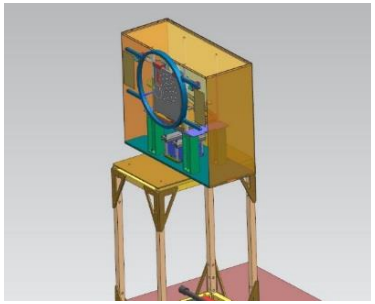

Hole in oven, cover (views -120C enviro)

Annulus blanket to reduce heat leak (black out, VDA in)

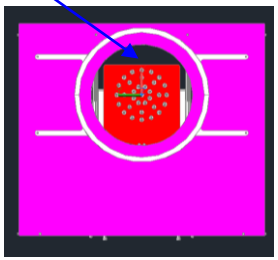

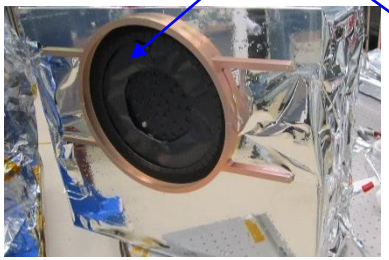

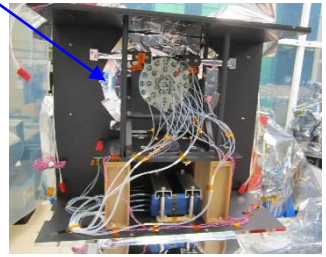

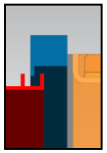

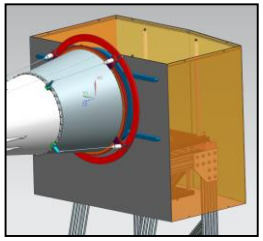

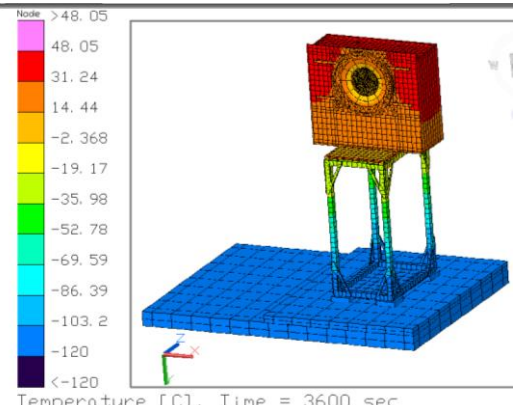

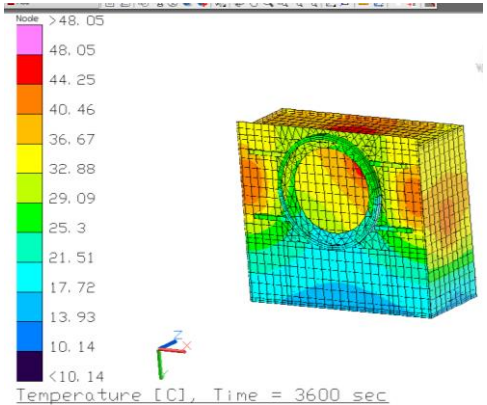

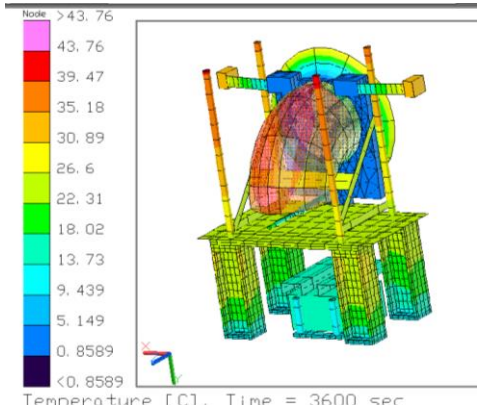

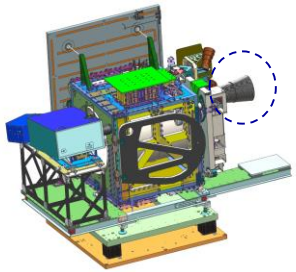

Design Progression

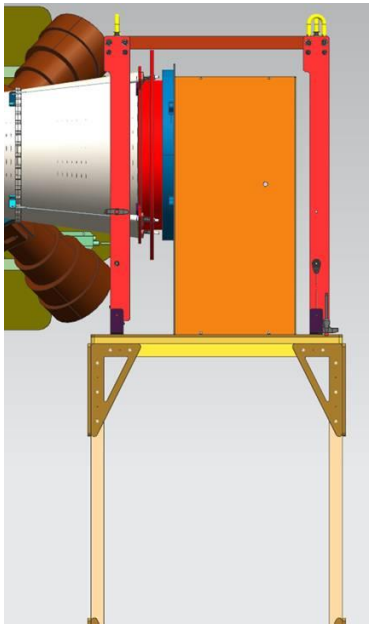

- Design Change: Post-Tvac
  - Additional Req'ts
    - Install crane lift bars (tvac at next level of assembly, with S/C, requires crane fixture to stay on during tvac due to access constraints, heat leak)
  - Thermal Impact
    - (minimal impact)
    - Analysis to verify heat leak through stand still acceptable

Lessons Learned:

Challenges unique to designing critical GSE include

- The **GSE hardware is expected to react to the needs of the flight hardware**, including late requirements changes, and **major design changes made after hardware is built** (where changes can be more costly and time-consuming)
- **Temperature limits** (and **power dissipations**) for in-vacuum performance can be difficult to track down, for off-the-shelf/legacy parts, be persistent

Requirement/Scope Creep

- Design kept "improving" each time we finalized on a design, on each of the BCE components (MAAT, Wheel, Star Target)
- Starting over, rework
- Lesson learned: Suggest **stating cost/schedule/risk impact** to Project and **negotiating for resources** as needed (time, and/or people) to meet new scope of work (ie, if the design significantly changes, and major redesign/rework is needed,… at the same time that the **number of tvac tests doubled or quadrupled**,… it may be time to bring on an additional person)

To blanket or not to blanket?

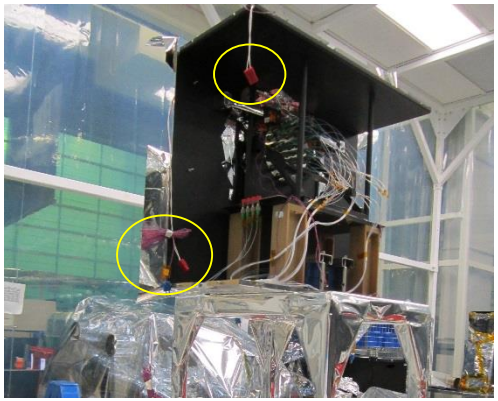

Standalone model of disconnects

- 4 Anderson connectors (maximum likely **for each ST panel**)
- 8 wires in, 8 out
- 35C boundary at ends (assume oven temperature 35C)
- Radiate to -120C shroud
- Compare: **2.7W** heat lost if bare, **0.2W lost if VDA**
- **Yes, recommend blanketing** (could be 15W to 30W total leak if bare, when include TC's)
- Opportunity to **implement lesson learned from MAAT:** calculation of harness heat leak, assessment of impact, decision to blanket → successful tvac test, with margin

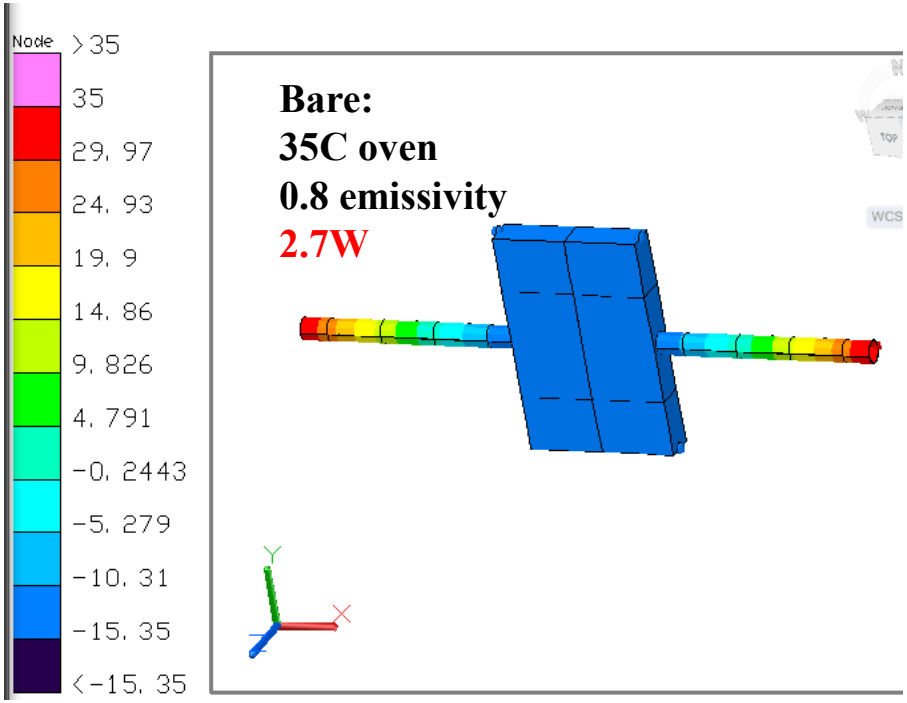

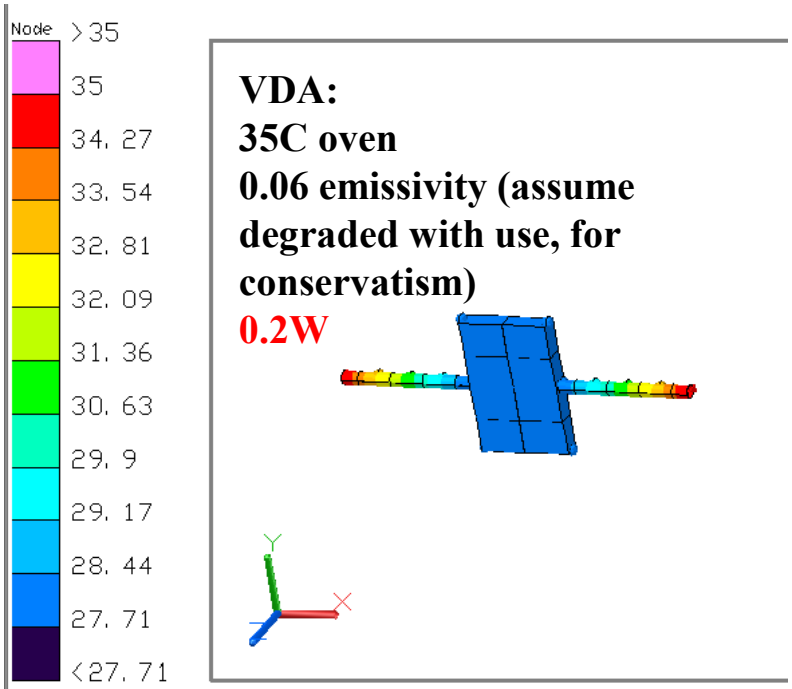

Acknowledgements

- Mechanical
  - Steve Chaykovsky
  - Kevin Dahya
  - Sheila Wall
  - Buddy Taylor
  - Tim Huss
  - Lester Megget
- Thermal
  - Matt Garrison
  - Dave Neuberger
  - Carol Mosier
  - Veronica Otero
  - David Steinfeld
- Electrical
  - John Schafer
  - Chris Palor
- Optics
  - Pete Liiva
  - Ivelin Bakalski
  - Jim Lyons
  - Pat Lyons
  - Anita Thompson
  - Felix Chi
  - Chris Choi
  - Diana Blair
  - Eleanya Onuma
  - Pete Dogoda
- Programmatics
  - Konrad Bergandy
  - Jay Neuman
  - Craig Auletti
  - Sito Balleza
  - Peter Aquino
  - Andy Wohl

Questions?

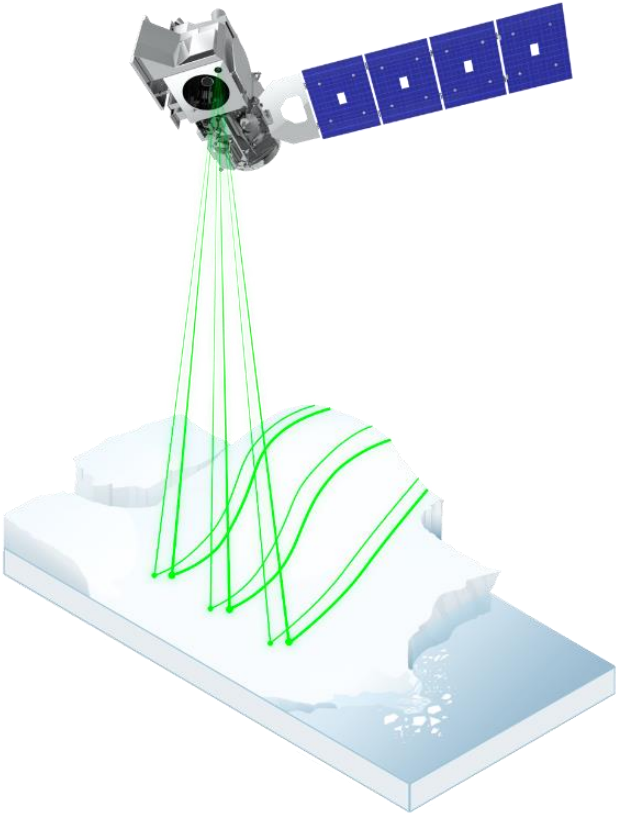

Abstract

Thermal Design, Tvac Testing, and Lessons Learned for Critical GSE of ATLAS and the ICESat-2 Mission

This presentation describes the thermal design of the three main of optical components which comprise the Bench Checkout Equipment (BCE) for the Advanced Topographic Laser Altimeter System (ATLAS) instrument, which is flying on the ICESat-2 mission. Thermal vacuum testing of these components is also described in this presentation, as well as a few lessons learned. These BCE components serve as critical GSE for the mission; their purpose is to verify ATLAS is performing well. It has been said that, in one light, the BCE is the most important part of ATLAS, since, without it, ATLAS cannot be aligned properly or its performance verified before flight. Therefore, careful attention was paid to the BCE's thermal design, development, and component-level Tvac testing prior to its use in instrument-level and spacecraft-level Tvac tests with ATLAS. This presentation describes that thermal design, development, and testing, as well as a few lessons learned.

Backup Slides

Key Acronyms

- ATLAS = Advanced Topographic Laser Altimeter System
- BCE = Bench Checkout Equipment
- G = Thermal Conductance
- ICESat-2 = Ice, Cloud, and land Elevation Satellite 2
- LTR = Lateral Transfer Retroreflector
- MAAT = Main Alignment / Altimetry Target
- ST = Star Target

ATLAS Alignment Sensitivity

- Compared to other laser altimeters GSFC has built, the ATLAS beam has:
  - Smallest transmitted beam
  - Smallest receiver Field of View (FOV)
  - Smallest alignment margin

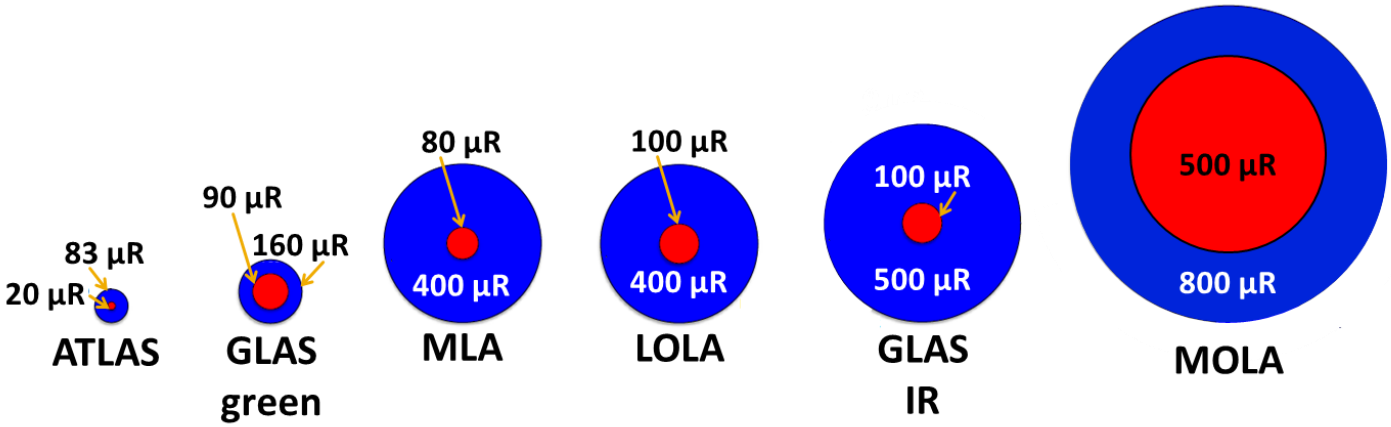

Comparison Between Laser Beam (red) and Receiver Field of View (blue) of Previous Laser Altimeters

Motivation for Mission

- **From Mission Website:**

- http://icesat.gsfc.nasa.gov/icesat2/mission_overview.php
- **"Why Study Ice?**
  - Understanding the causes and magnitudes of **changes in the cryosphere** remains a **priority for Earth science research**. NASA's Ice, Cloud, and land Elevation Satellite (ICESat) mission, which operated from 2003 to 2009, pioneered the use of laser altimeters in space **to study the elevation of the Earth's surface and its changes.**
- **Why we need ICESat-2**
  - As a result of ICESat's success, the National Research Council's (NRC) 2007 Earth Science Decadal Survey recommended a follow-on mission to continue the ICESat observations. In response, NASA tasked its Goddard Space Flight Center (GSFC) with developing and deploying the ICESat-2 mission - now scheduled for launch in 2017. The primary goals of the ICESat-2 mission are consistent with the NRC's directives: *to deploy a spaceborne sensor to collect altimetry data of the Earth's surface optimized to **measure ice sheet elevation change and sea ice thickness**, while also **generating an estimate of global vegetation biomass**.*
  - ICESat-2, slated for launch in 2017, will continue the important observations of **ice-sheet elevation change, sea-ice freeboard, and vegetation canopy height** begun by ICESat in 2003.

  - Together, these datasets will allow for **continent-wide estimates in the change in volume of the Greenland and Antarctic ice sheets over a 15-year period, and long-term trend analysis of sea-ice thickness."**