National Aeronautics and Space Administration

August 21, 2018

Determining Thermal Management Requirements for an ISRU Plant using a Reduced Order Model

TFAWS 2018 - Galveston Island Convention Center, 5600 Seawall Blvd, Galveston, Texas

Thermal Architecture - Development

System thermal model progression:

1) Single point – steady state

- Easy to build in excel.
- Good for mission trades.
- Easy to swap components.

Thermal Architecture - Development

System thermal model progression:

1) Single point – steady state

- Easy to build in excel.
- Good for mission trades.
- Easy to swap components.

3) High fidelity – steady state / transient

- Geometrically represent many components.
- Use Thermal Desktop or similar software.
- Predict worst case temperatures.
- Flesh out the system design.

Thermal Architecture - Development

System thermal model progression:

1) Single point – steady state

- Easy to build in excel.
- Good for mission trades.
- Easy to swap components.

2) Reduced order - Transient

- Identify thermal requirements.
- Gives higher fidelity predictions.
- Needed to construct Step 3.

3) High fidelity – steady state / transient

- Geometrically represent many components.
- Use Thermal Desktop or similar software.
- Predict worst case temperatures.
- Flesh out the system design.

Thermal Architecture - Development

System thermal model progression:

Current point of interest

1) Single point – steady state

- Easy to build in excel.
- Good for mission trades.
- Easy to swap components.

2) Reduced order - Transient

- Identify thermal requirements.
- Gives higher fidelity predictions.
- Needed to construct Step 3.

3) High fidelity – steady state / transient

- Geometrically represent many components.
- Use Thermal Desktop or similar software.
- Predict worst case temperatures.
- Flesh out the system design.

Thermal Architecture - Development

System thermal model progression:

1) Single point – steady state

- Easy to build in excel.
- Good for mission trades.
- Easy to swap components.

Not a lot of variability

3) High fidelity – steady state / transient

- Geometrically represent many components.
- Use Thermal Desktop or similar software.
- Predict worst case temperatures.
- Flesh out the system design.

Thermal Architecture - Development

System thermal model progression:

Several different options for obtaining this information.

- ASPEN Custom Modeler
- MATLAB/SIMULINK
- SINDA/FLUINT

2) Reduced order - Transient

- Identify thermal requirements.
- Gives higher fidelity predictions.
- Needed to construct Step 3.

Propose: Use Cantera Python module.

- Freely available, open source, extensible.
  - Originated from Caltech.
- Designed for thermodynamics, transport processes, chemical kinetics problems.[1]

David G. Goodwin, Harry K. Moffat, and Raymond L. Speth. *Cantera: An object-oriented software toolkit for chemical kinetics, thermodynamics, and transport processes*. http://www.cantera.org, 2017. Version 2.3.0. doi:10.5281/zenodo.170284

Notional ISRU Fuel Plant on Mars

Plant Overview:

- ISRU plant on a predeployed lander produces fuel prior to crew arrival.[2]
  - Option 1: LOX (~435 days)
  - Option 2: LOX and LCH_4 (~435 days)
- 3 independent modules.
- If one failed, 2 still produce enough propellant.[2]

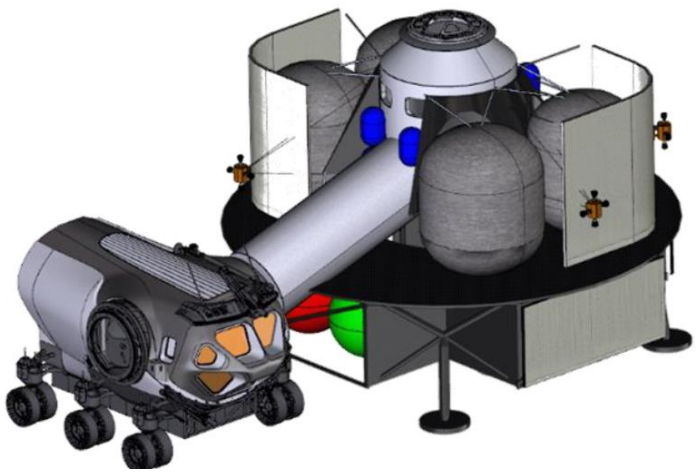

Evolvable Mars Campaign (EMC) Mars Ascent Module (MAV) concept.[3]

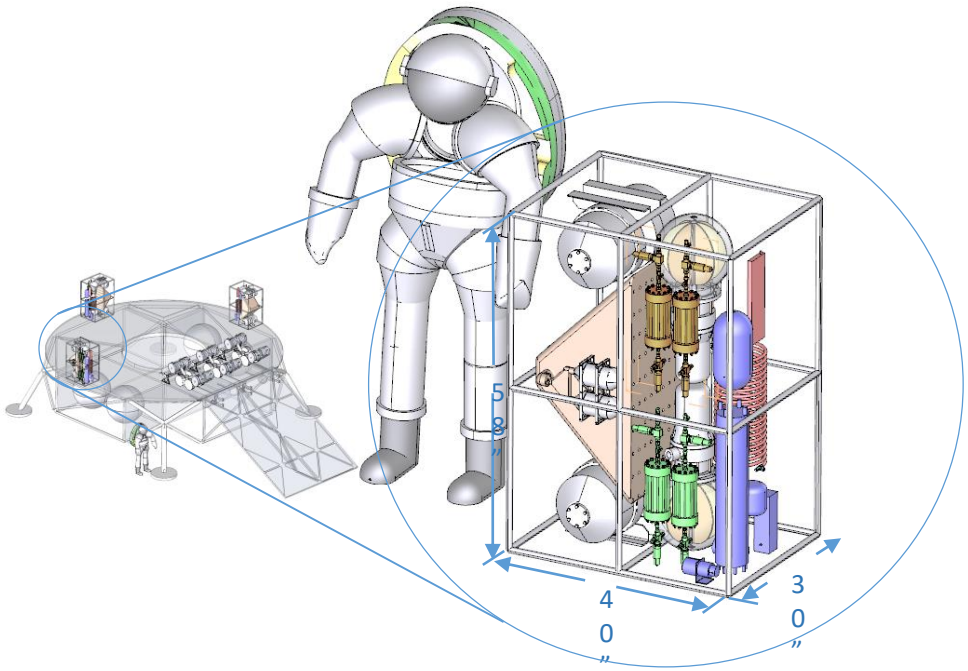

Notional ISRU system packaging – produced for EMC.[4]

Notional ISRU Fuel Plant on Mars

Objective:

- Ensure components stay within their temperature limits.
- Minimize required power and radiator size.
  - E.g. Leverage environment, waste heat, energy storage.

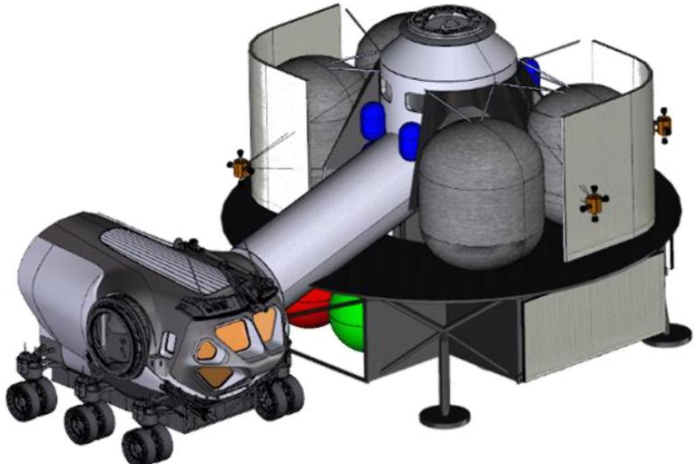

Evolvable Mars Campaign (EMC) Mars Ascent Module (MAV) concept.[3]

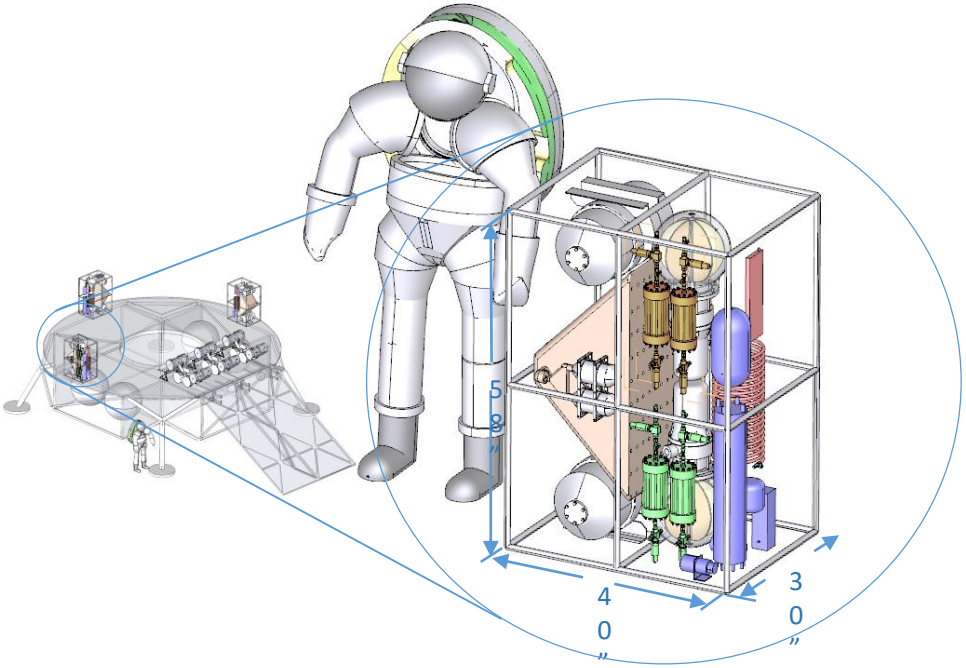

Notional ISRU system packaging – produced for EMC.[4]

Notional ISRU Fuel Plant on Mars

Modeling Challenges:

- More dynamic than most chemical plants.
  - Mars day/night temperature swing.
  - Could vary production rate.
- Steady state models can over predict heating/cooling needs.

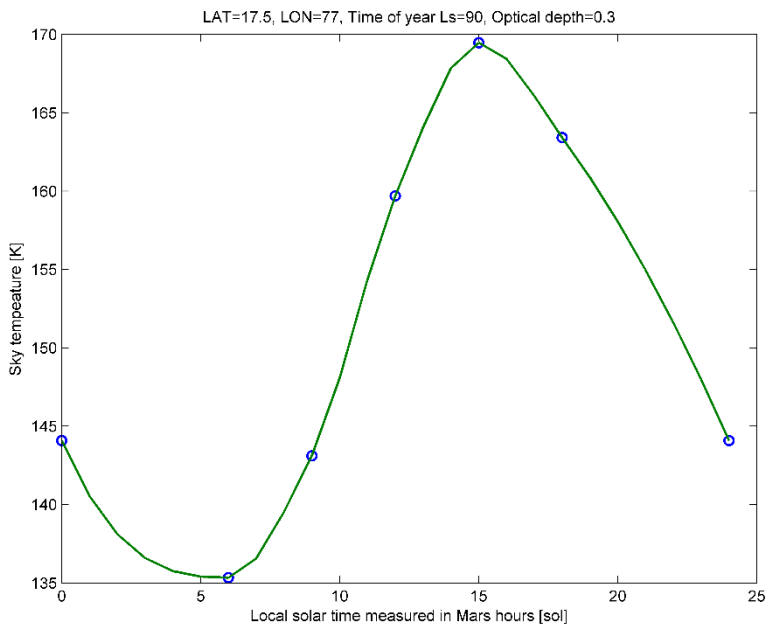

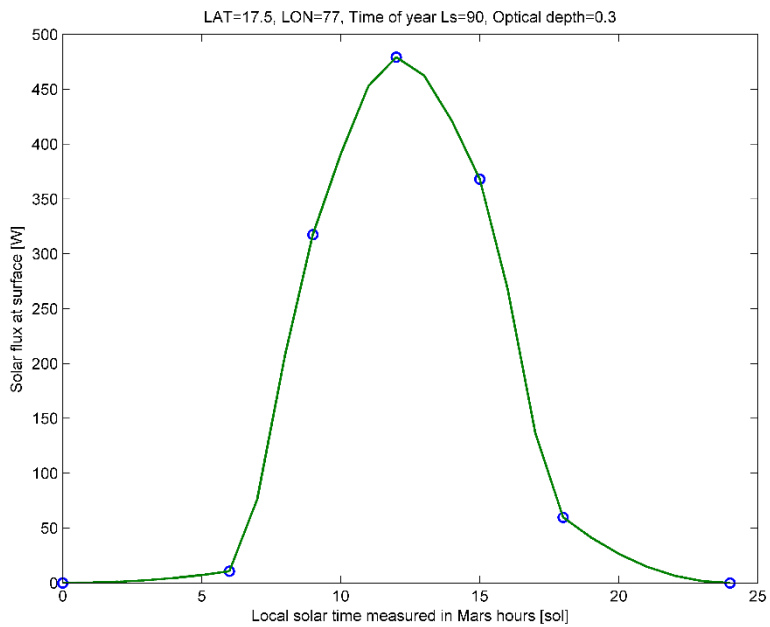

Mars sky temperature (left) and inlet solar flux (right) for a location in Jezero crater during summer solstice with dust optical depth of 0.3. Interpolated form data provided by ref [5].

Notional ISRU Fuel Plant on Mars

Modeling Challenges:

- High power and heat rejection for a payload.
- Need to identify heat recuperation options.

Results from NASA EMC's steady state excel models of two plant types[4]

<u>435 day comparison</u>

Option 1 (LOX only):

- 14kW heat rejection.
- Uses a CO_2 freezer and solid oxide electrolyzer.

Option 2 (LOX + LCH_4):

- 17.5kW heat rejection
- Uses a CO_2 freezer, sabatier reactor and water electrolyzer.

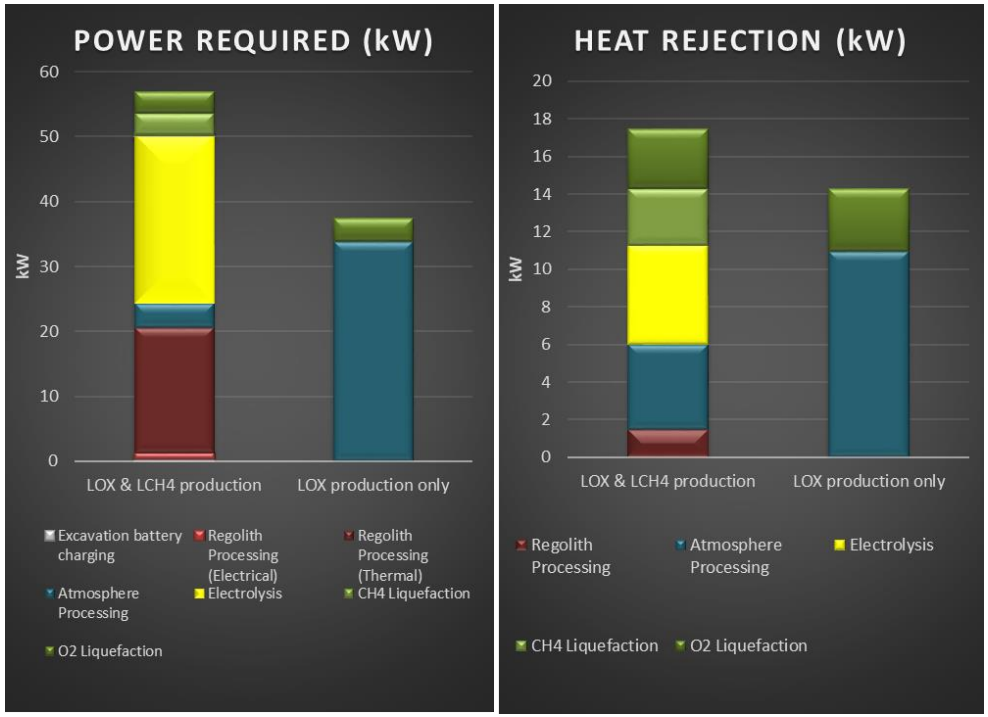

Output from EMC model for 435 production days – provided by Paz .[4]
Waste heat = sustained worst case heat rejection (300K environment).

ISRU Plant Modeling Challenges

Modeling Challenges:

- Lots of design variability:
  - LOX or LOX + LCH_4.
  - Various possible technologies (e.g. SOE, RWGS, Sabatier).

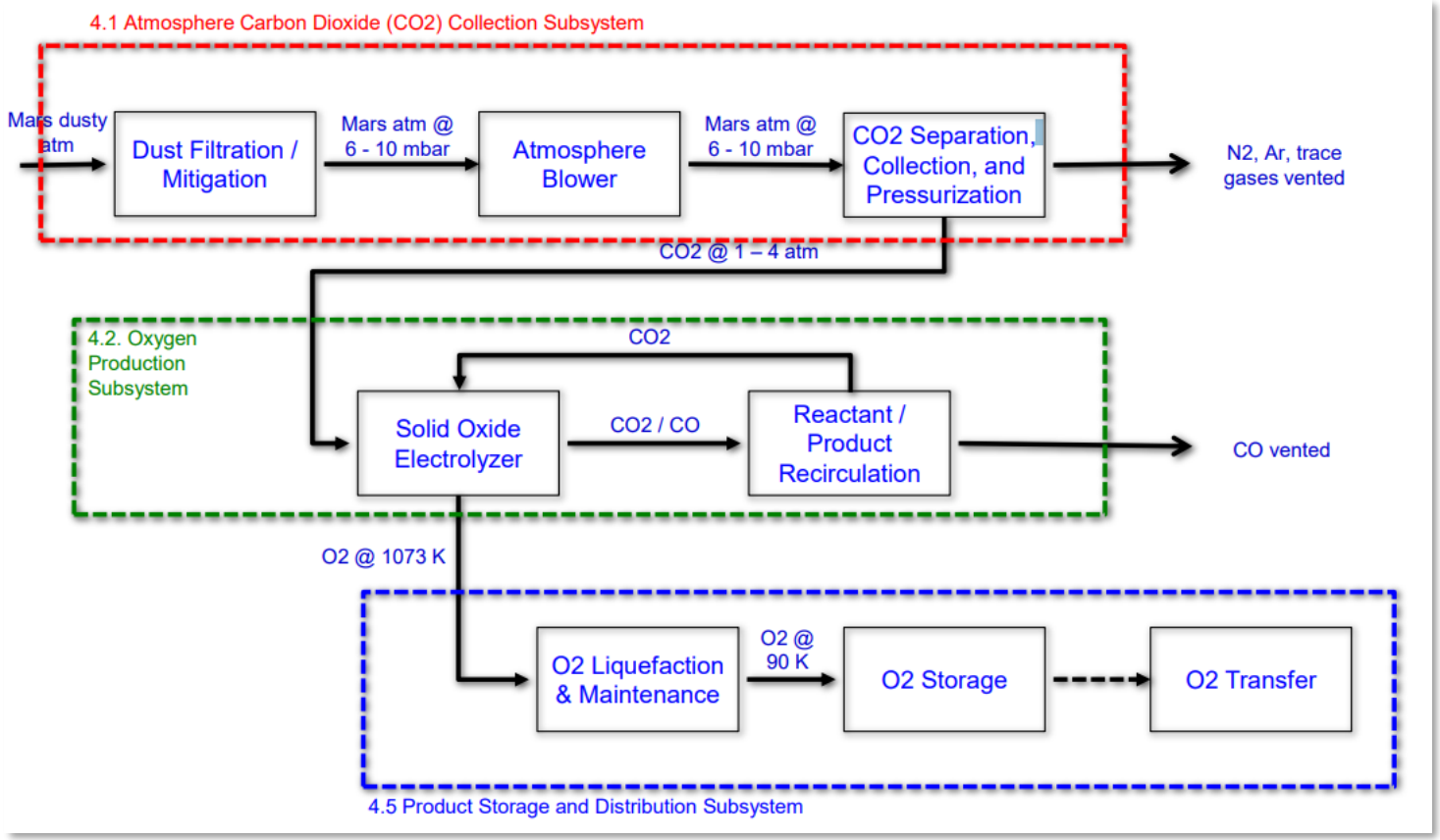

Block diagram for ISRU plant LOX production with an Solid Oxide Electrolyzer (SOE) .[6]

ISRU Plant Modeling Challenges

Modeling Challenges:

- Lots of design variability:
  - LOX or LOX + LCH_4.
  - Various possible technologies (e.g. SOE, RWGS, Sabatier).

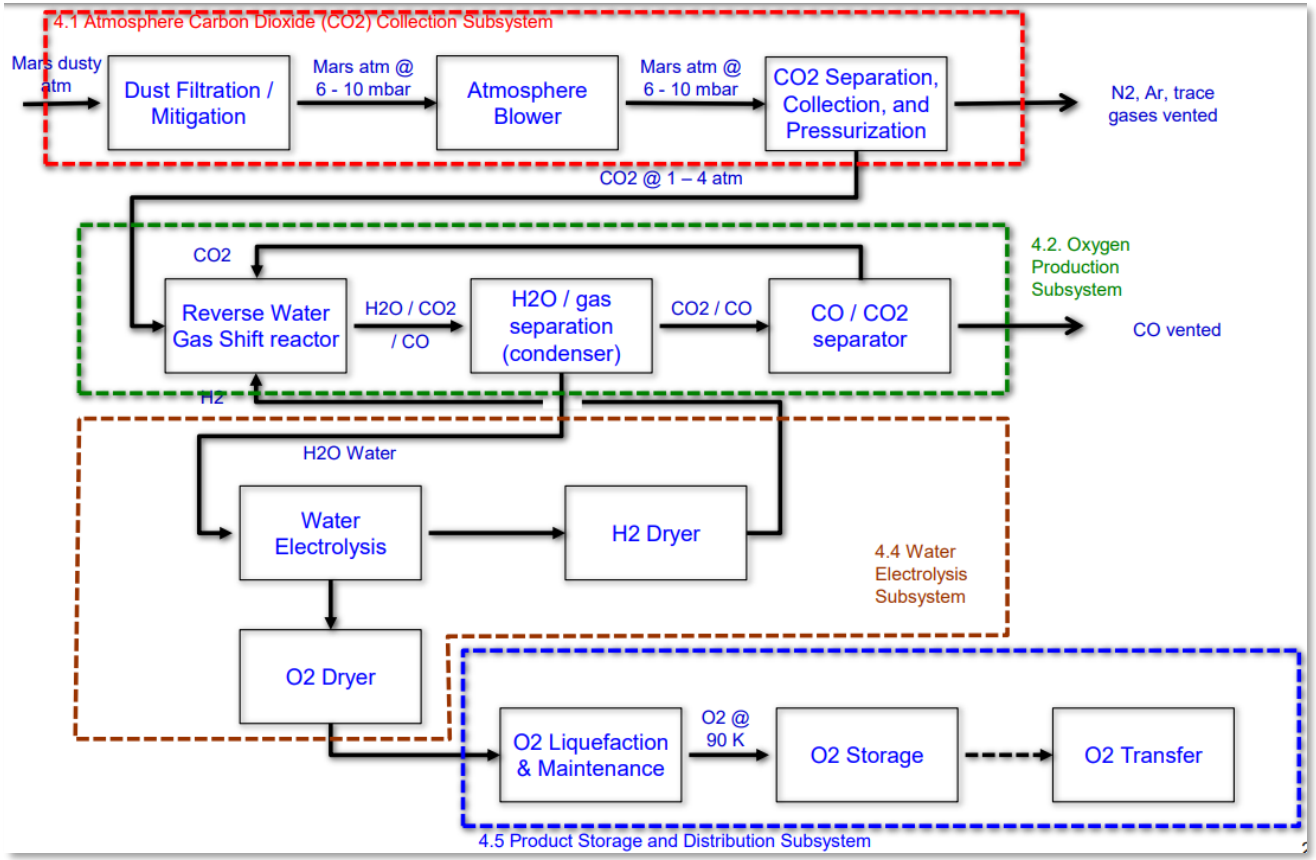

Block diagram for ISRU plant LOX production with an Reverse Water Gas Shift Reactor (RWGS) .[6]

ISRU Plant Modeling Challenges

Modeling Challenges:

- Lots of design variability:
  - LOX or LOX + LCH_4.
  - Various possible technologies (e.g. SOE, RWGS, Sabatier).

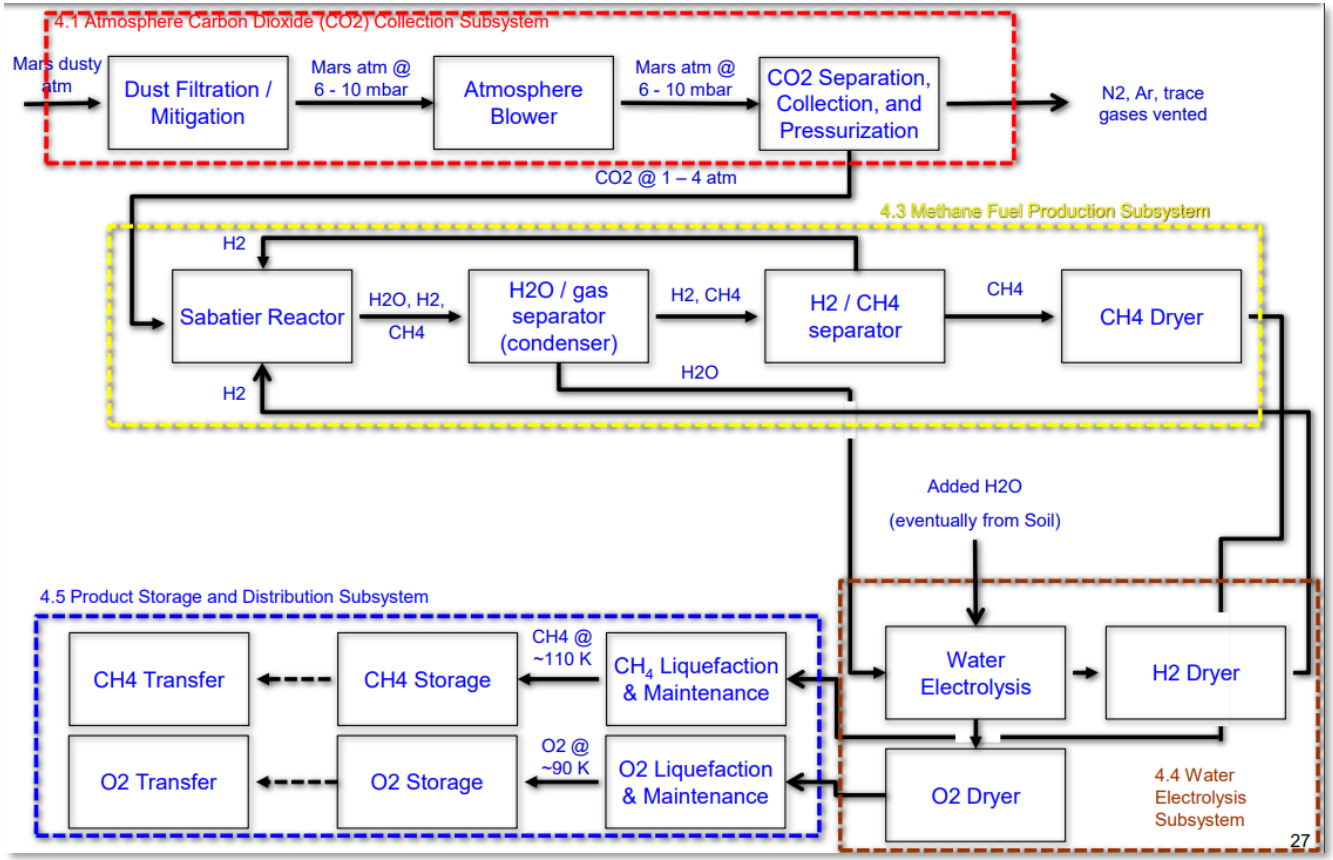

Block diagram for ISRU plant LOX & LCH_4 production with an Sabatier reactor.[6]

Cantera Process Flow

Modeled component:	Cantera Object:
Lumped mass	Reactor • Contains: solid, liquid, or gas • Can specify ideal gas or constant pressure
Boundary	Reservoir • Specify: contents, temperature, pressure • Can dynamically update
Thermal Conductance	Wall • Specify: area, conductance, object emissivity for simple enclosure problems, additional heat load
Mass flow	Mass Flow Controller • Specify flow rate (must be ≥0) Pressure controller (pair with Mass Flow Controller) • Specify valve coefficient [kg/(s Pa)] • $\dot{m} = \dot{m}_{set\ upstream} + K_v(P_1 - P_2)$ Valve • Specify valve coefficient [kg/(s Pa)] • $\dot{m} = K_v(P_1 - P_2)$

Cantera Process Flow

Example Cantera Model Structure:

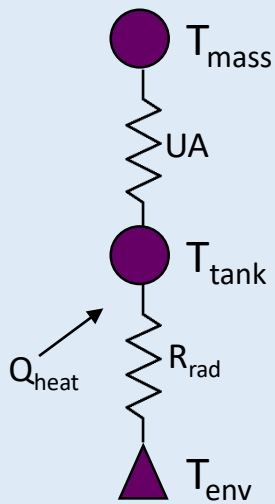

Heat Transfer Network

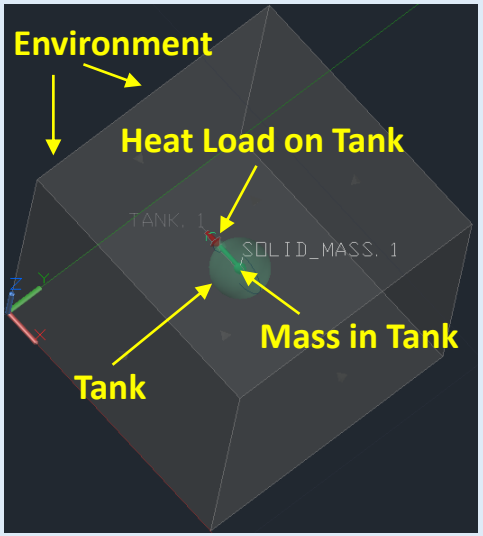

Thermal Desktop Model

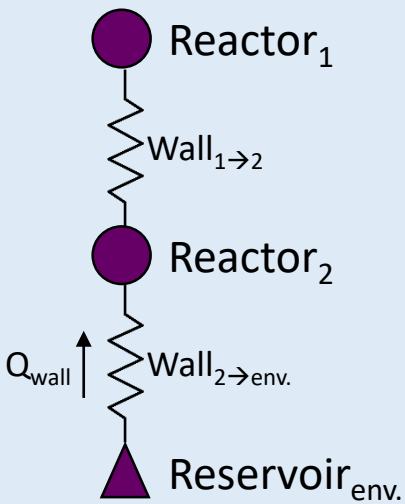

Cantera Model Structure

Reactor energy conservation:

$$\frac{dU}{dt} = -p\frac{dV}{dt} - \dot{Q}_{net\ walls} + \sum_{n=i}^{N} \dot{m}_{in} h_{in} - h \sum_{n=i}^{N} \dot{m}_{out}$$

Wall heat transferred between reactors:

$$\dot{Q}_{wall} = UA\left(T_{left} - T_{right}\right) + \varepsilon\sigma A\left(T_{left}^4 - T_{right}^4\right) + Aq_{fn}(t)$$

Modeling with Cantera

Cantera Model vs. Thermal Desktop:

- Heat water in a 36[in] long steel tube.
  - Outer Diameter: 0.5[in], Inner Diameter: 0.3 [in].
- Cantera model:
  - Water – constant pressure reactors.
  - Steel – steel filled reactors.
  - Doesn't calculate pressure drop from friction.
  - Convection coefficient, G_{conv}, is an input (used correlations in SINDA v6 manual Appendix B1).

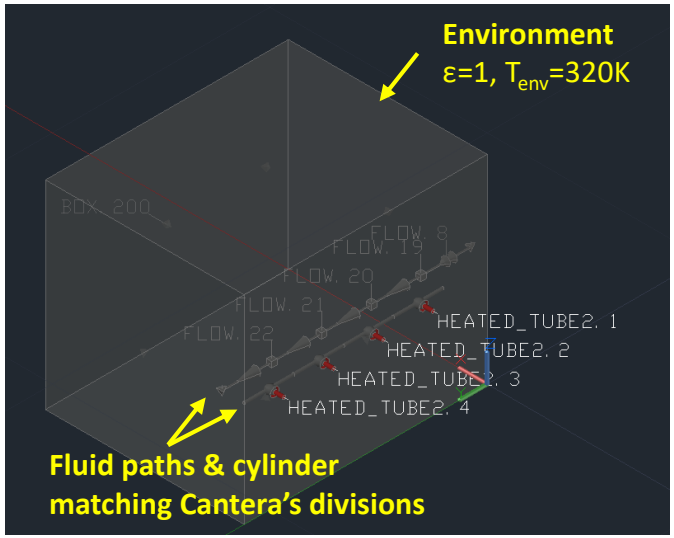

Thermal Desktop Model.

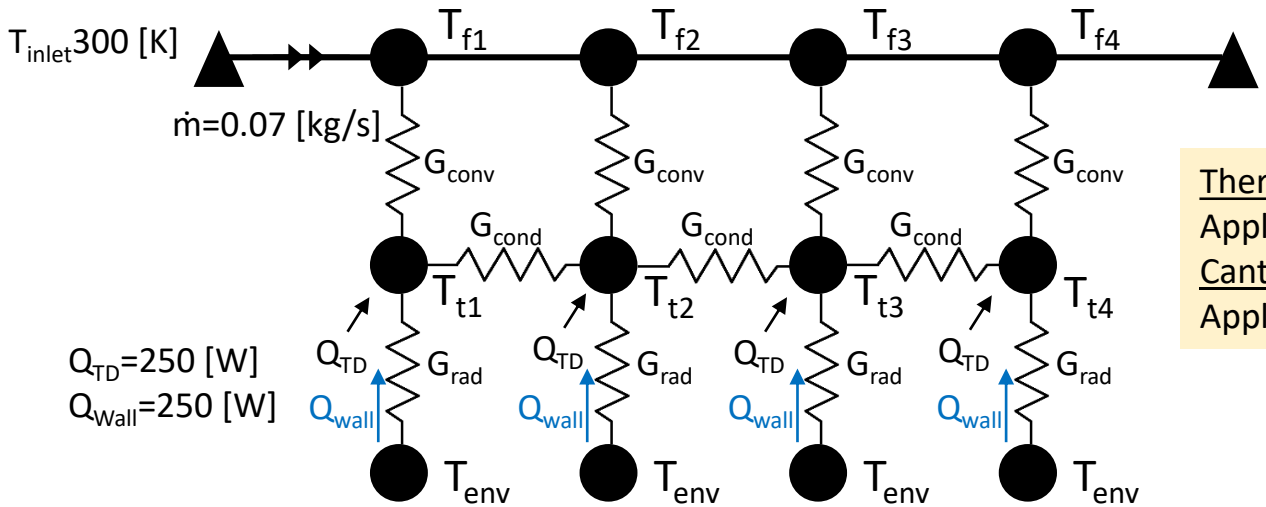

Heat Transfer Network.

<u>Thermal Desktop</u>
Apply heat load directly to node, Q_{TD}
<u>Cantera</u>
Apply heat load via wall Q_{wall}

Modeling with Cantera

Cantera Model vs. Thermal Desktop:

- Heat water in a 36[in] long steel tube.

	Tf0	Ts0	Tf1	Ts1	Tf2	Ts2	Tf3	Ts3
Cantera	300.85	306.81	301.71	307.61	302.56	308.42	303.42	309.22
TD	300.85	306.81	301.71	307.61	302.56	308.42	303.42	309.22
delta	0.00	0.00	0.00	0.00	0.00	0.00	0.00	0.00

Fluid properties for Gconv, were calculated at fluid temperature (easy point of comparison).

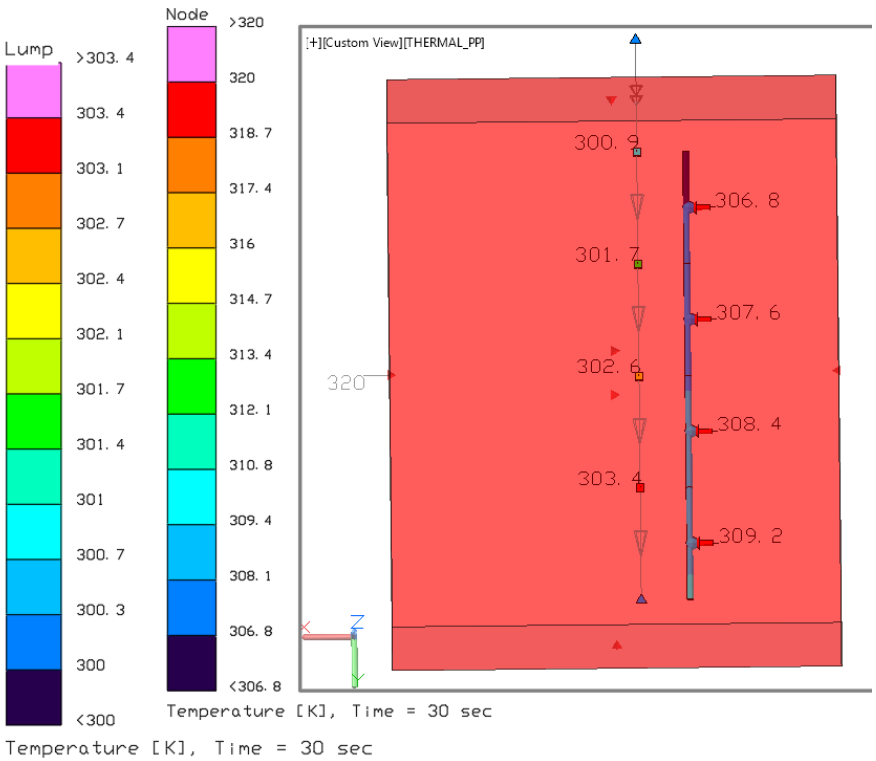

Thermal Desktop Model.

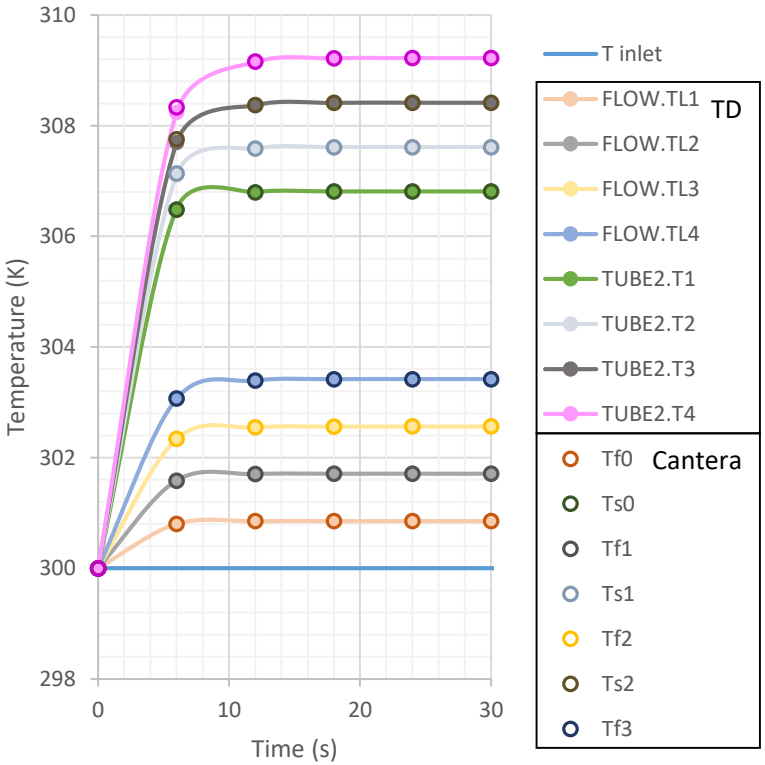

Heat up comparison.

Modeling with Cantera

Cantera Model vs. Thermal Desktop:

- Because heat loads are applied at walls Q_{TD} does not always equal Q_{wall}.

<u>How to determine Q_{wall}?</u>

Write out 2 energy balances:

1. Apply heat loads, Q_{TDs}, directly to nodes.
2. Add heat loads, Q_{walls}, to walls between nodes (Cantera wall governing equation).

Find what Q_{wall} to Q_{TD} relationship solves to the same equation.

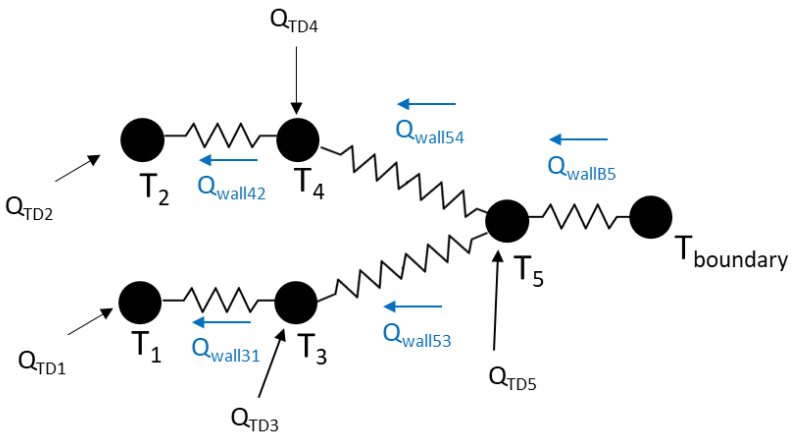

Heat Transfer Network.

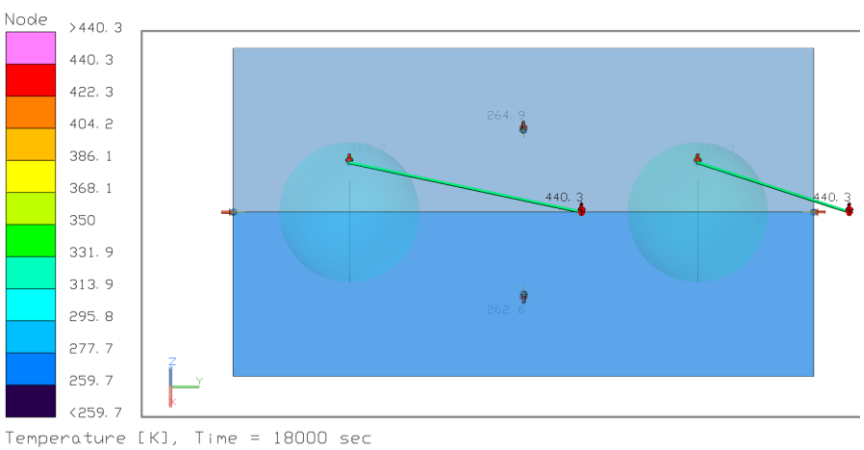

Thermal Desktop Model.

- $Q_{wall31}=Q_{TD1}$
- $Q_{wall42}=Q_{TD2}$
- $Q_{wall53}=Q_{TD1}+Q_{TD3}$
- $Q_{wall54}=Q_{TD2}+Q_{TD4}$
- $Q_{wallb3}=Q_{TD5}+Q_{TD4}+Q_{TD3}+Q_{TD2}+Q_{TD1}$

Q_{TD} to Q_{wall} relationship. Valid if simple enclosure radiation assumption holds.

Modeling with Cantera

Cantera Model vs. Thermal Desktop:

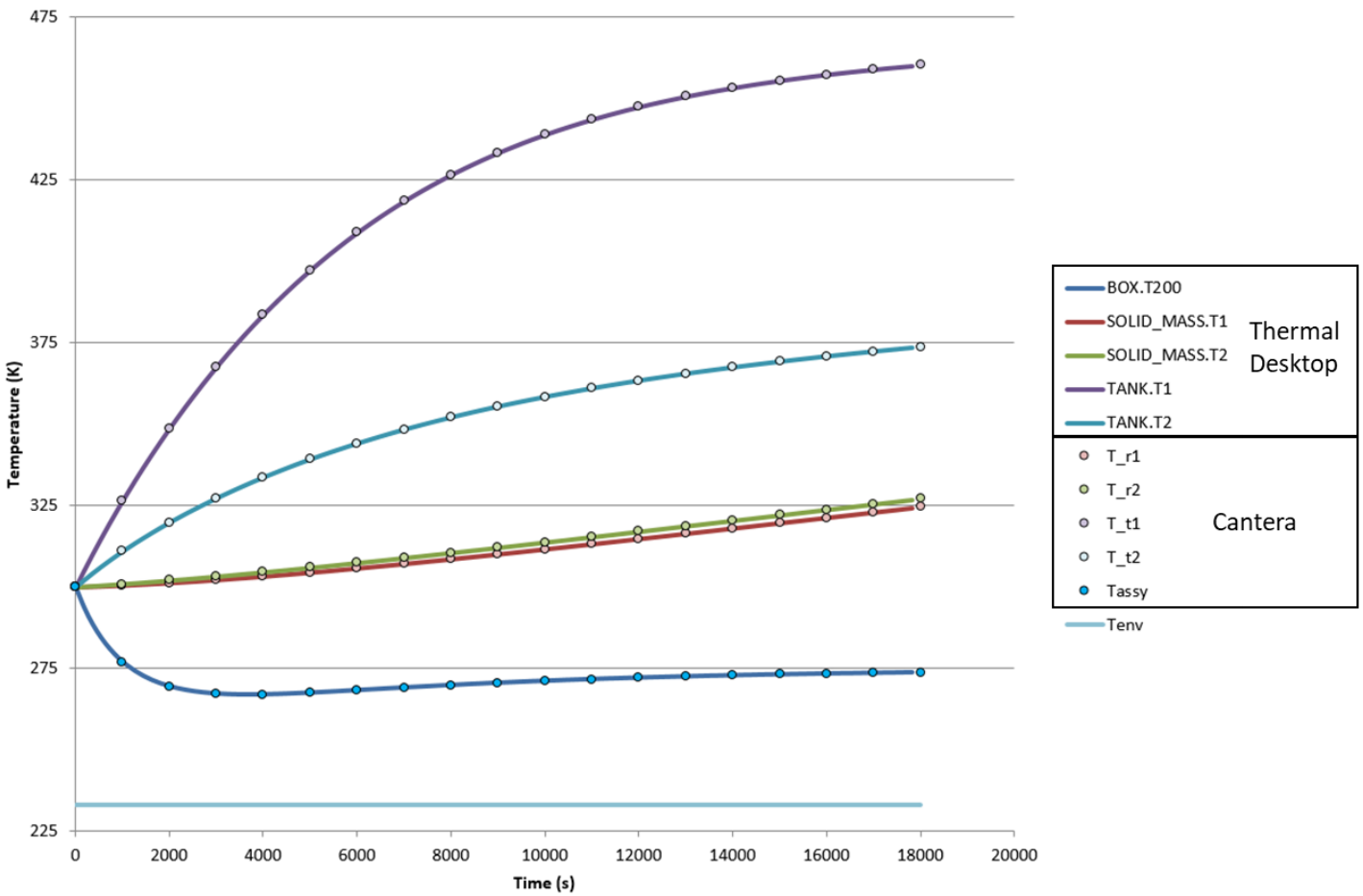

Thermal Desktop Model Output vs Cantera Model Output

Modeling with Cantera

Cantera Summary:

- Relies more on user input than Thermal Desktop SINDA/FLUINT.
  - E.g. user calculates Tsinks and conductances.
- Provides a good level of freedom to model flow of a chemical plant.
  - E.g. can set reservoir states based on user defined functions.
- Useful object oriented structure can be leveraged.
  - Can create/modify reactors in loops.
  - Can choose which components to model.
- Has built-in equations of state for liquid/water CH_4, O_2, and H_2O.
  - Useful for condensation/liquefaction.
- Uses thermodynamic models (NASA9, constant specific heat) to obtain enthalpy, entropy, and specific heat at a given state.
- Can obtain transport properties from:
  - CoolProp Python module
  - Transport data file[1,7]
- Can calculate reactor products (use gri30.xml or custom reaction specifications).

Currently developing Cantera models for ISRU case: LOX production with a CO_2 freezer and Solid Oxide Electrolyzer.

Backup

Plant Level Thermal Control System

Approximate Mars Atmosphere for ISRU Ops:

- Day Temperatures: -30C to 5C
- Night Temperatures: -90 to -60C
- Pressure: 730 - 925 Pa
- Max wind: 15 m/s[8,9]

From ISRU capabilities study.[10]
Actuals are landing site dependent.

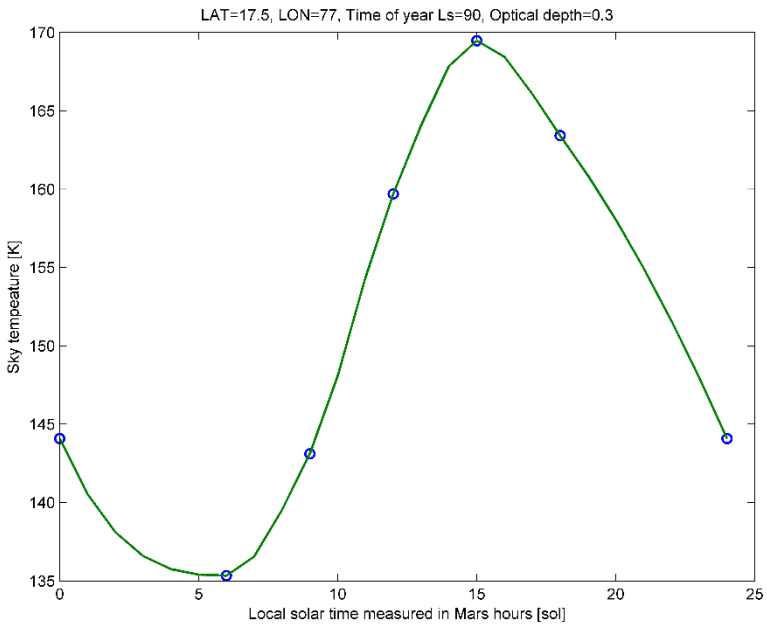

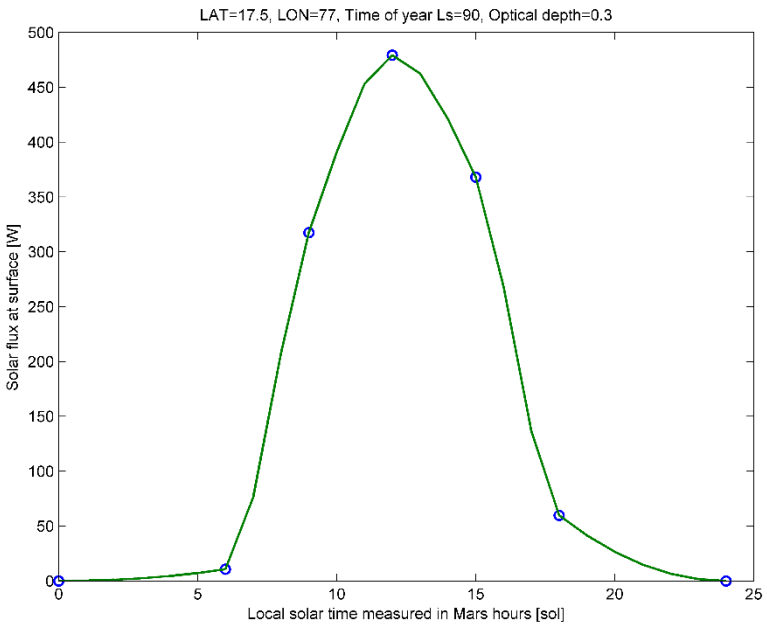

Mars sky temperature and inlet solar flux for a location in Jezero crater during summer solstice with dust optical depth of 0.3. Interpolated form data provided by ref [4].

Modeling with Cantera

Couple reactor to Mars Environment:

- Read file with solar flux, sky, ground, and air temperatures vs. time.
- Calculate sink temperature, Tsink.
- Connect reactor to reservoir set to Tsink via a wall with radiation.
- Connect reactor to reservoir set to Tatm via will with convection.
- Update reservoirs with time.

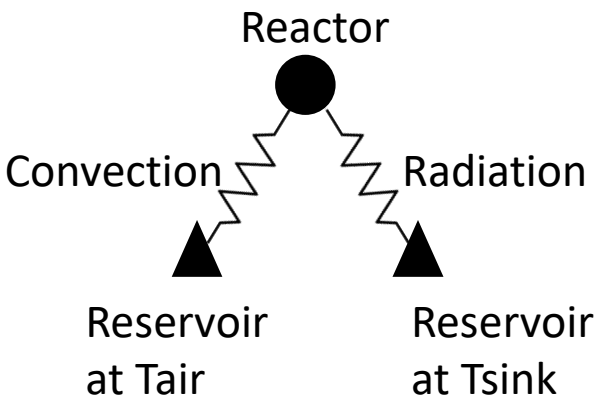

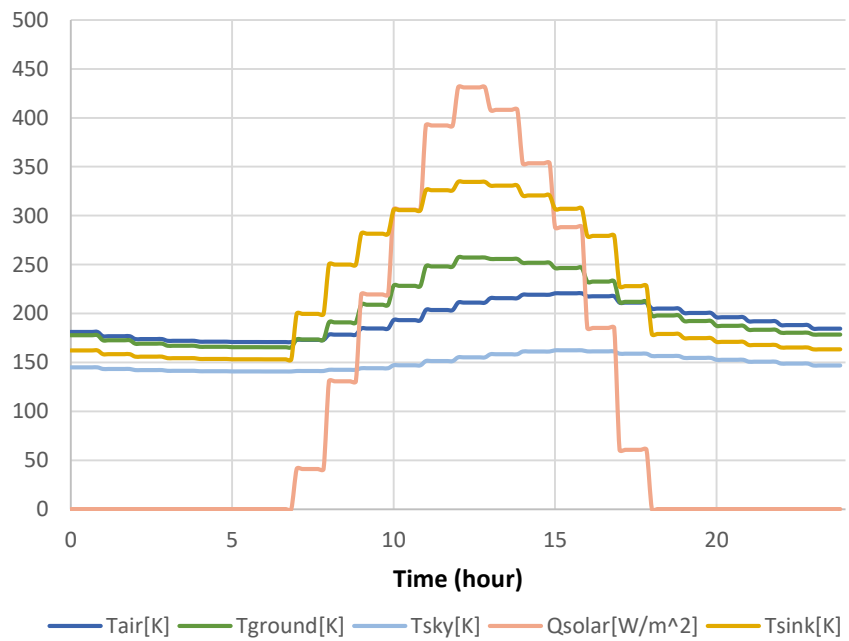

Sample model input for coupling object to the Mars environment (temperatures updated once per hour).

Notional Lander TCS with ISRU Plant

- NASA's Evolvable Mars Campaign's 2017 concept assumed a joined thermal control system for the Mars Descent Module (MDM) and MAV.
  - Cryocoolers for ISRU fuel production/liquefaction and the propellant tank's Broad Area Cooling network both connect to a loop heat pipe system that rejects heat via radiators.

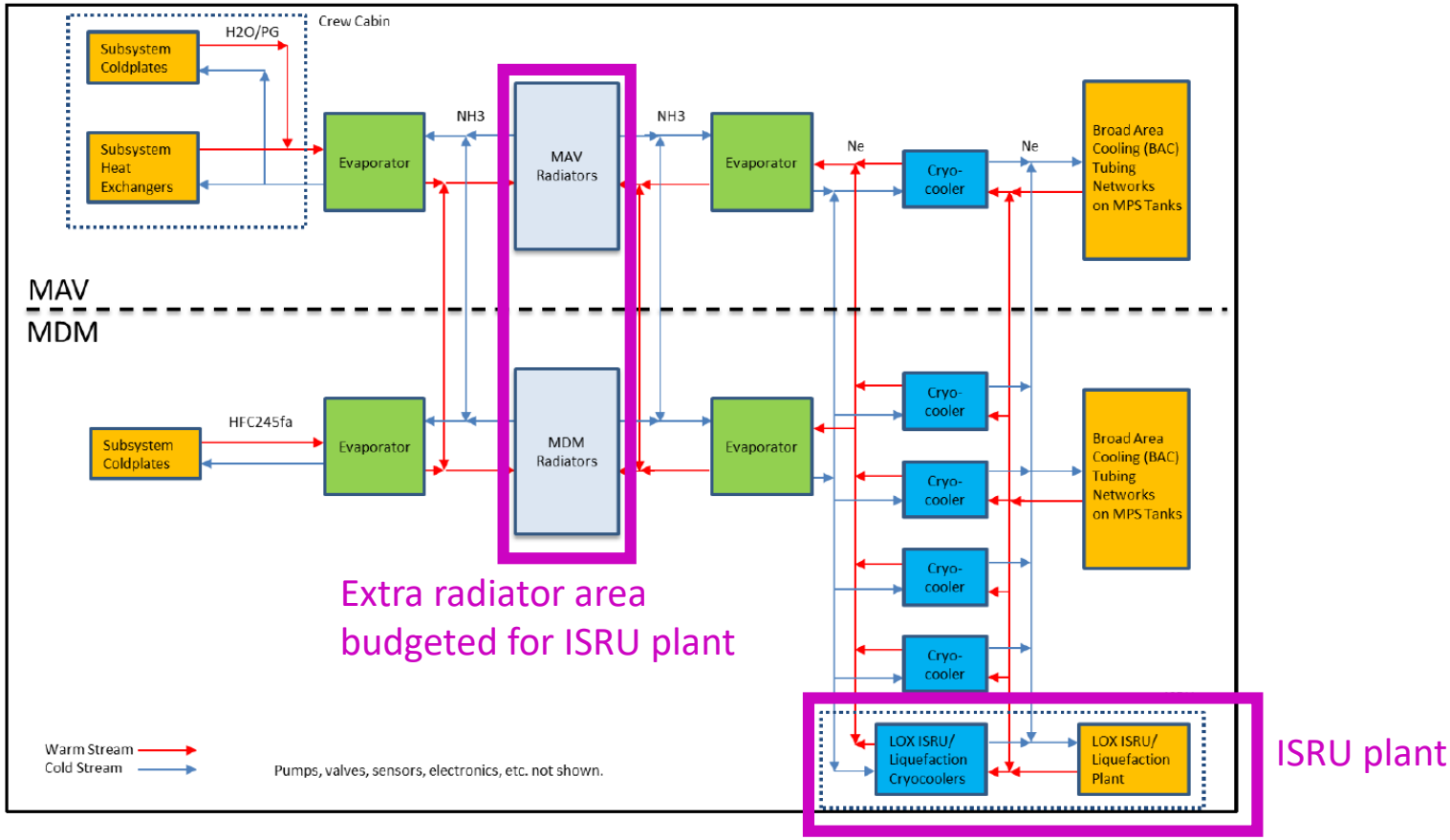

Evolvable Mars Campaign (EMC) MAV thermal control system concept. [3]

Modeling with Cantera

Cantera Model vs. Thermal Desktop:

- Heat ideal CO_2 gas in Inconel tube
- Inconel Tube
  - ε=0.69, cp= 412.41 [J/(kg K)]
  - length=36[in], OD=0.5[in], ID=0.3[in]
  - 36 divisions in tube
  - Heat per node: $Q_{TD}=Q_{wall}$=-100[W]
  - Expect slight in results because Thermal Desktop's pipe uses edge nodes.
- Fully developed flow
  - $\dot{m}_f$= 0.000495 [kg/s]
  - $T_{in}=T_{initial}$= 305[K], P_{in}=101325[Pa]
  - Properties found with fluid temperature
- Environment: ε=1, T_{env}=923.15[K]

```
======Summary of Cantera Results at end time======
time end (seconds) = 4000
fluid reactor  0  T [K]= 335.233617045  P [Pa]= 101325.0
solid reactor  0  T [K]= 761.64042079
tube to fluid wall 0 Qnet [W]= 12.9616379322
fluid reactor  1  T [K]= 363.188495391  P [Pa]= 101325.0
solid reactor  1  T [K]= 767.028258477
tube to fluid wall 1 Qnet [W]= 12.3729154791
fluid reactor  2  T [K]= 389.164945007  P [Pa]= 101325.0
solid reactor  2  T [K]= 773.859582912
tube to fluid wall 2 Qnet [W]= 11.811247238
fluid reactor  3  T [K]= 413.376938604  P [Pa]= 101325.0
solid reactor  3  T [K]= 780.879676064
```

```
fluid reactor  33  T [K]= 753.365353267  P [Pa]= 101325.0
solid reactor  33  T [K]= 872.793258829
tube to fluid wall 33 Qnet [W]= 3.00385484918
fluid reactor  34  T [K]= 758.436195215  P [Pa]= 101325.0
solid reactor  34  T [K]= 873.808685244
tube to fluid wall 34 Qnet [W]= 2.88865847529
fluid reactor  35  T [K]= 763.297335443  P [Pa]= 101325.0
solid reactor  35  T [K]= 874.587614997
tube to fluid wall 35 Qnet [W]= 2.77419790941
<== main.py:379:demo_heat_tube(): leaving ...
```

Cantera Results, Ideal GasReactor start and end of pipe – transient run to steady state.

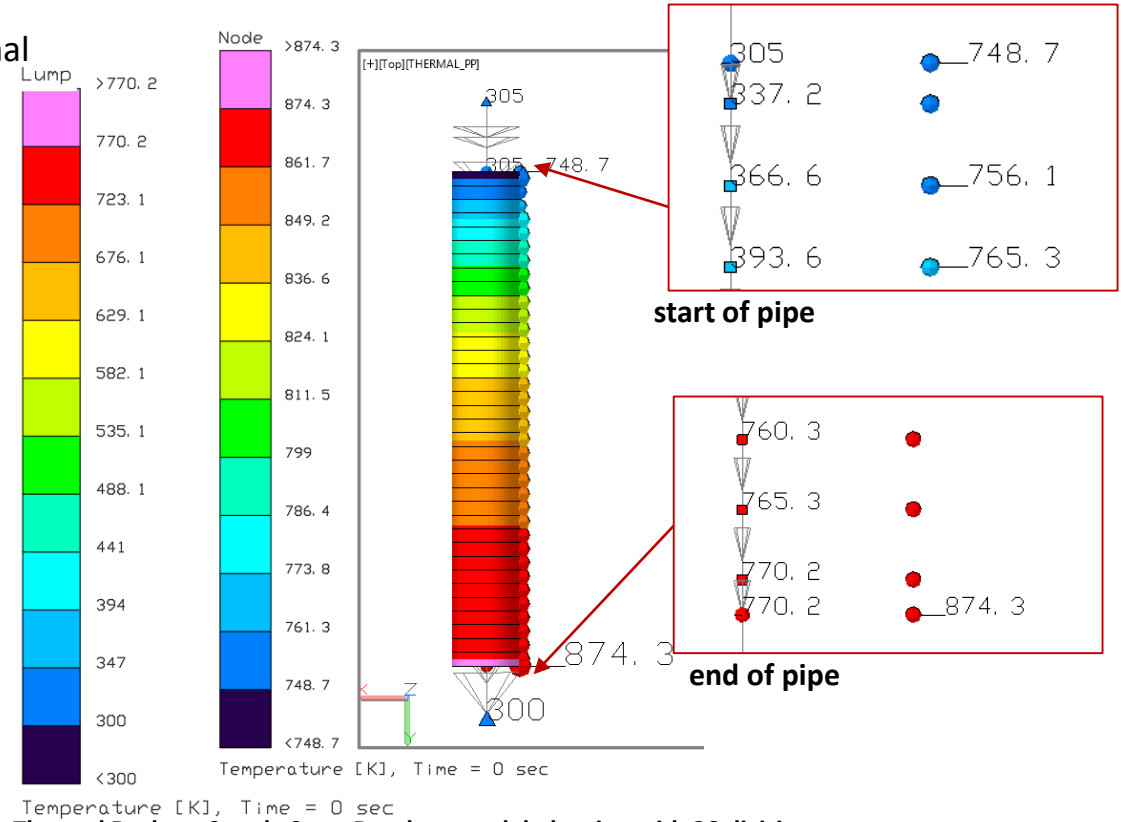

Thermal Desktop Steady State Results – modeled a pipe with 36 divisions.
Ideal gas property file with temperature dependent viscosity, thermal conductivity, and constant pressure specific heat at 101325Pa.
MODR=0 (use fluid properties to calculate Nusselt number).

Sources

References:

1. David G. Goodwin, Harry K. Moffat, and Raymond L. Speth. Cantera: An object- oriented software toolkit for chemical kinetics, thermodynamics, and transport processes. http://www.cantera.org, 2017. Version 2.3.0. doi:10.5281/zenodo.170284
2. National Aeronautics and Space Administration, “NextSTEP-2 BAA Appendix D: In Situ Resource Utilization (ISRU) Technology - Broad Agency Announcement NNH16ZCQ001K-ISRU,” *FedBizOpps*. [Online]. Available: https://www.fbo.gov/index?s=opportunity&mode=form&tab=core&id=34eb0ba219ff3a8d97c9c4b2c9302bf1. [Accessed: 30-Jul-2018].
3. T. Polsgrove *et al.*, “Human Mars Lander Design for NASA’s Evolvable Mars Campaign,” presented at the IEEE Aerospace Conference, 5-12 Mar. 2016, United States, 2016.
4. J. E. P. Kleinhenz, “An ISRU Propellant Production System to Fully Fuel a Mars Ascent Vehicle,” presented at the AIAA SciTech Forum, Grapevine, TX, United States, 2017.
5. Burns, Lee, “Methodology and Results for Computation of Mars Surface Thermal Parameters from Mars-Global Reference Atmospheric Model Outputs,” Raytheon/Jacobs ESSSA Group, MSFC Natural Environments Branch. (Internal Report).
6. D. Linne, J. Sanders, S. Starr, N. Suzuki, and T. O’Malley, “Overview of Proposed ISRU Technology Development,” p. 28.
7. See R. J. Kee, G. Dixon-Lewis, J. Warnatz, M. E. Coltrin, J. A. Miller, H. K. Moffat, Sandia National Laboratories Report SAND86-8246B (1998).
8. P. Bhandari et al., “Mars Science Laboratory Thermal Control Architecture,” SAE International, Warrendale, PA, SAE Technical Paper 2005-01–2828, Jul. 2005.
9. K. S. Novak, J. G. Kempenaar, M. Redmond, and P. Bhandari, “Preliminary Surface Thermal Design of the Mars 2020 Rover,” Jul. 2015.
10. D. L. Linne, G. Sanders, and K. Taminger, “Capability and Technology Performance Goals for the Next Step in Affordable Human Exploration of Space,” in 8th Symposium on Space Resource Utilization, Kissimmee, Florida, 2015.

Sources

Images:

- Blocks, CC0 Creative Commons, https://pixabay.com/en/blocks-wooden-toy-alphabet-letters-25800/
- House, CC0 Creative Commons, https://openclipart.org/detail/213781/house-coloured
- City, CC0 Creative Commons, https://pixabay.com/en/city-buildings-skyscrapers-towers-48851/
- Resister symbol, Released into public domain, https://commons.wikimedia.org/wiki/File:Resistor_symbol_America.svg
- Lander, Produced by NASA, T. Polsgrove *et al.*, "Human Mars Lander Design for NASA's Evolvable Mars Campaign," presented at the IEEE Aerospace Conference, 5-12 Mar. 2016, United States, 2016.
- Notional ISRU packing, Produced by NASA, J. E. P. Kleinhenz, "An ISRU Propellant Production System to Fully Fuel a Mars Ascent Vehicle," presented at the AIAA SciTech Forum, Grapevine, TX, United States, 2017.