Thermal Control Design for the Subarcsecond Telescope and BaLloon Experiment (STABLE)

Hared Ochoa,
Jet Propulsion Laboratory,
California Institute of Technology

Presented By
Hared Ochoa

Thermal & Fluids Analysis Workshop
TFAWS 2014
August 4 - 8, 2014
NASA Glenn Research Center
Cleveland, OH

Subarcsecond Telescope And BaLloon Experiment

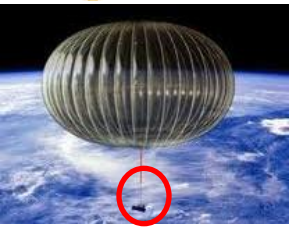

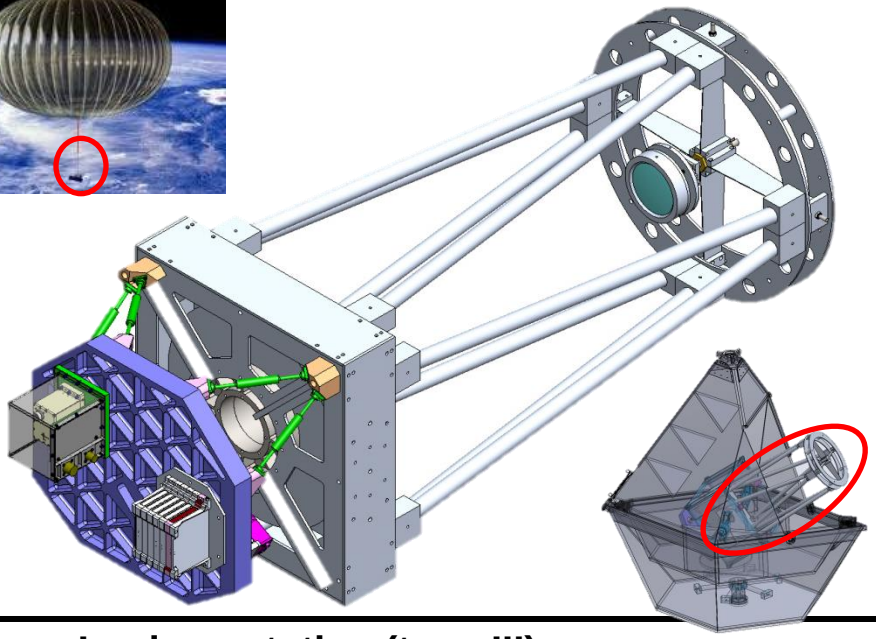

Objective

Demonstrate 0.1 arc sec pointing stability

- Exposure time ~ 1minute
- Above 99% of the atmosphere
- Visible spectrum
- Nighttime
- Relatively Low SNR

Implementation (type III)

- Coarse Loop – Balloon-Born Interface Test-Bed (BIT) U of Toronto
- Fine Loop – JPL
  - Telescope (COTS)
  - 3Axis rate sensor (COTS, JPL 7x)
  - Camera (COTS) from UK consortium
  - Fast Steering mirror (COTS)
  - Estimation and control algorithms
- Launch – Fort Sumner, NM
- 24 hour flight with 8 hour observation window.
- 35 – 40 km Altitude

Key Milestones

Project Start	October 2012
PMSR	February 2013
Project PDR	November 2013
Project CDR/IIR	Aug 2014
System I&T	January 2015
Ready to Launch	April 2015
Launch	September 2015

STABLE Payload in the BIT Gondola

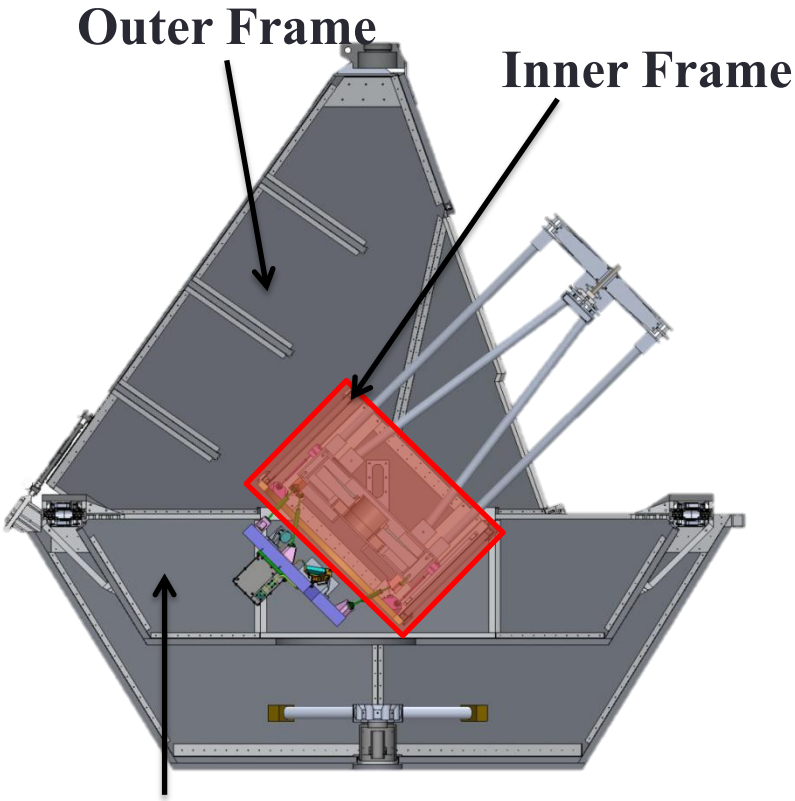

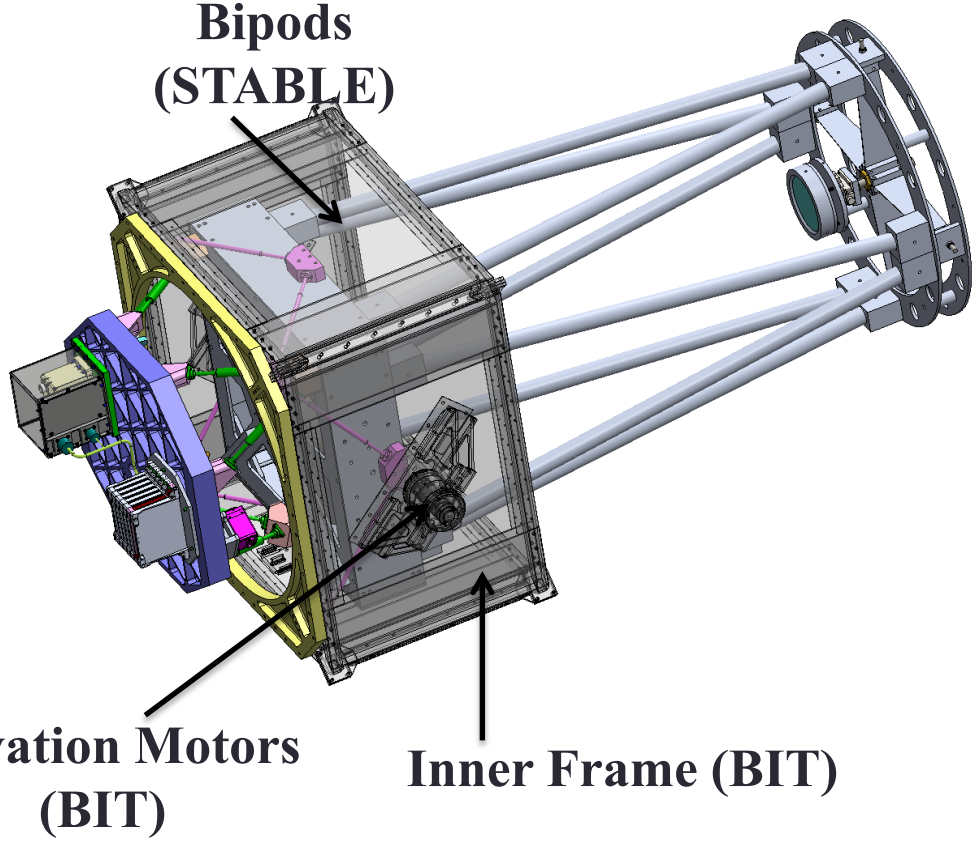

Responsible Parties
BIT Gondola + Outer/Inner Frame: University of Toronto

Mech Interface Bipods: JPL Mech

STABLE Payload

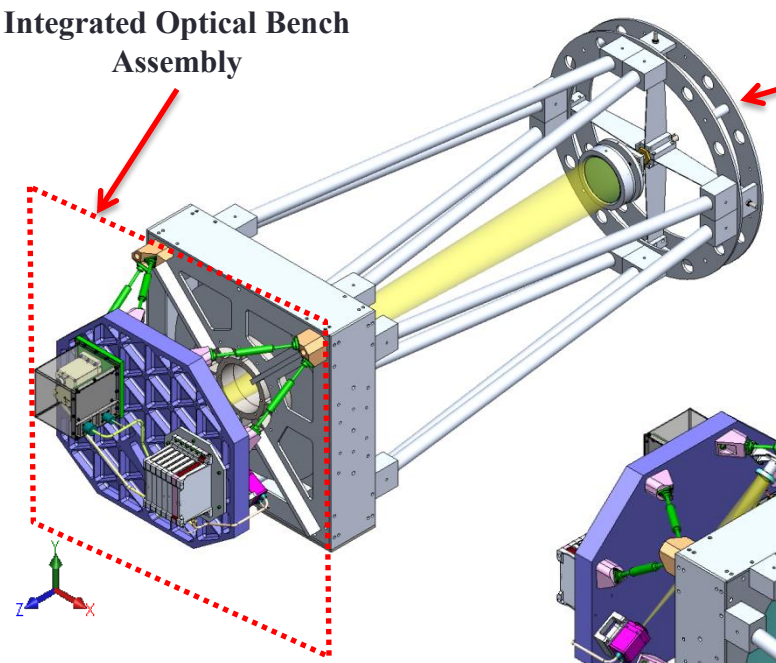

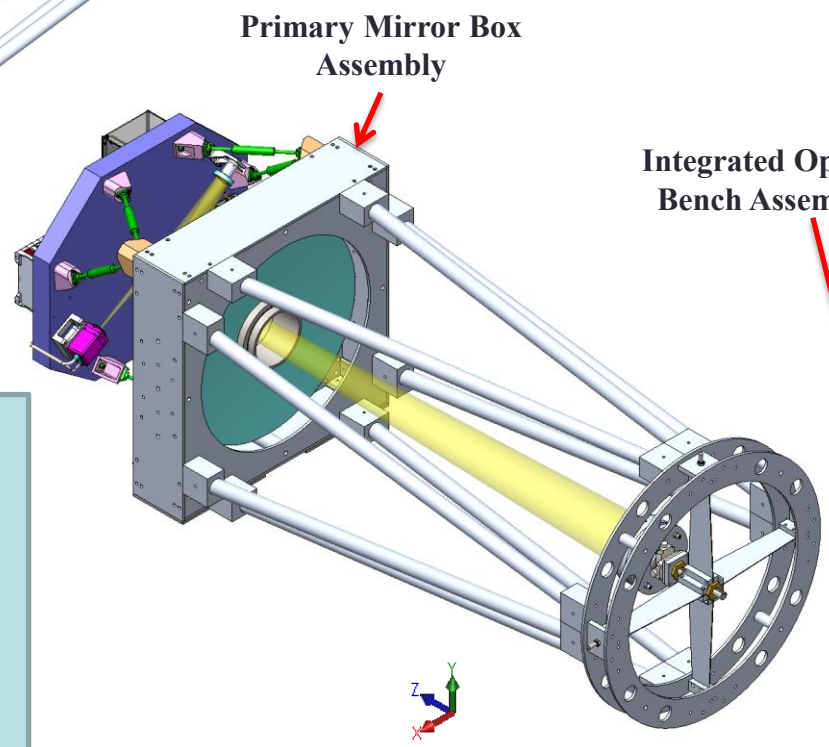

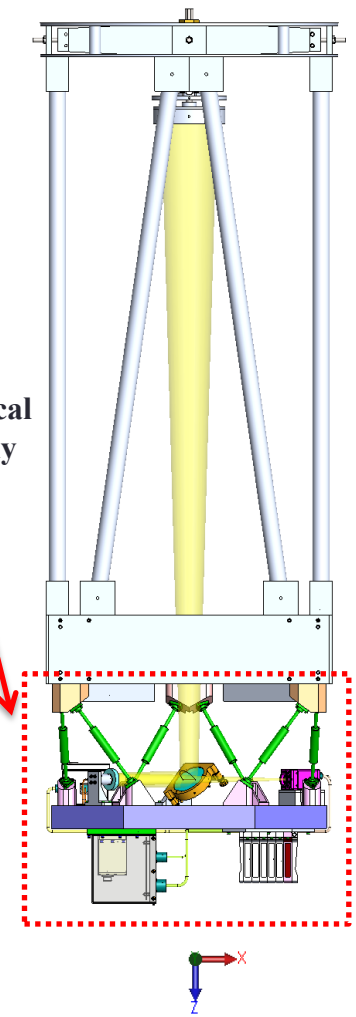

Responsible Parties

Telescope: Equinox Interscience, Inc

Integrated Optical Bench Assembly
- Bench + Bipods: Mech
- Fold Mirror: Optics + Mech
- Fast Steering Mirror + Elec: Pointing Control System (PCS)
- Camera: PCS
- Refocusing Stage: Optics
- Attitude Rate Sensor: PCS
- CDH: C&DH

STABLE Telescope Layout

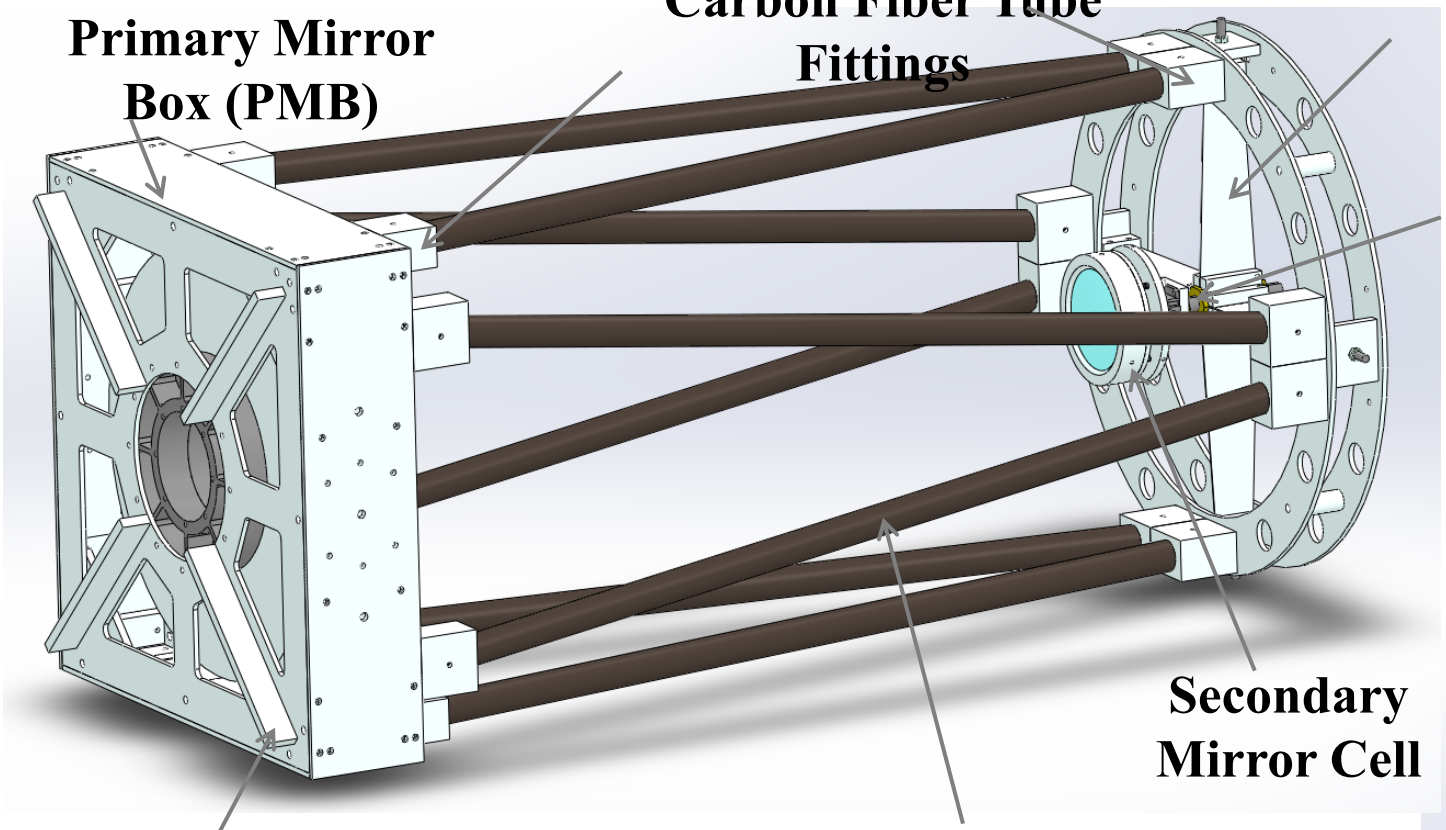

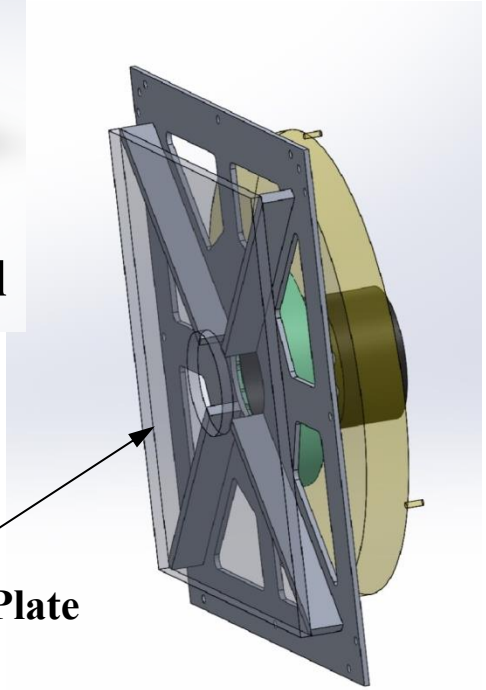

Mission Concept

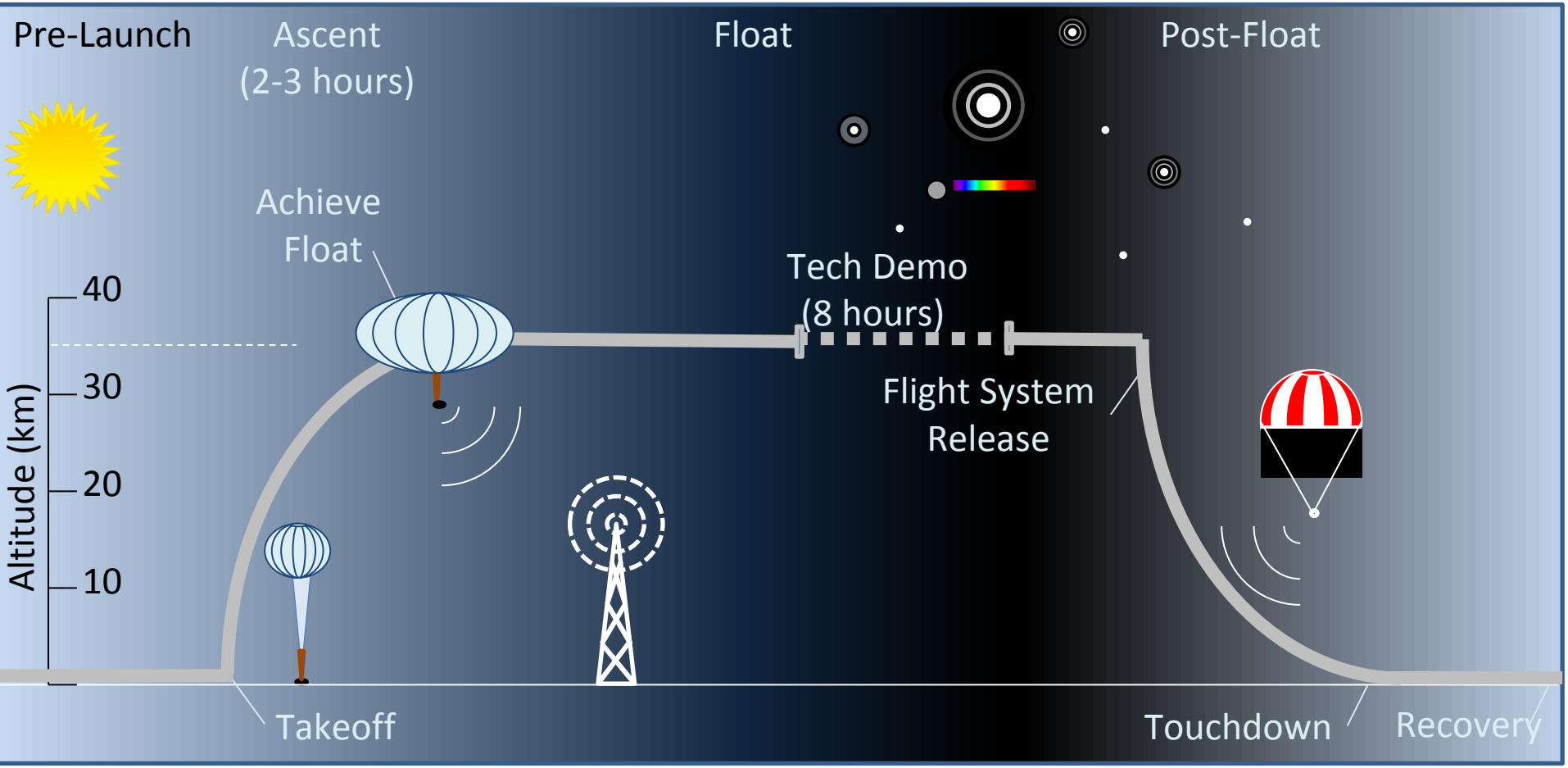

Environment Parameters

- Air Temperature
  - Public Radiosonde data University of Wyoming
- Convection
  - Leveraged coefficients from LDSD project
  - Forced and Natural Convection

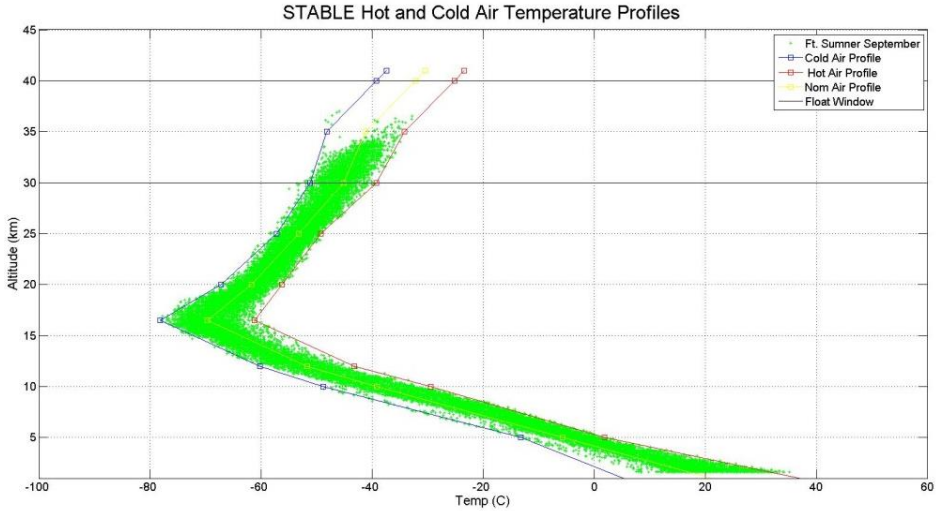

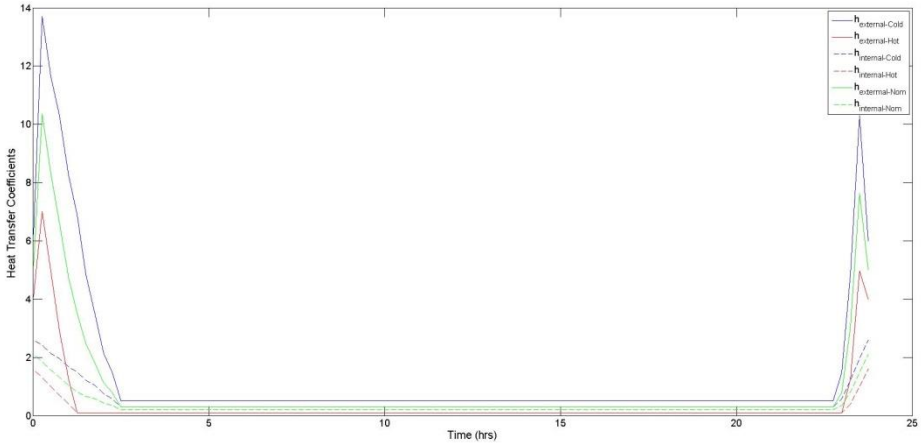

Temperature distribution

- Air Temperature
  - Initially estimates were very cold
  - Investigated distribution of air temperature at float altitudes
  - Distribution showed skewed characteristics

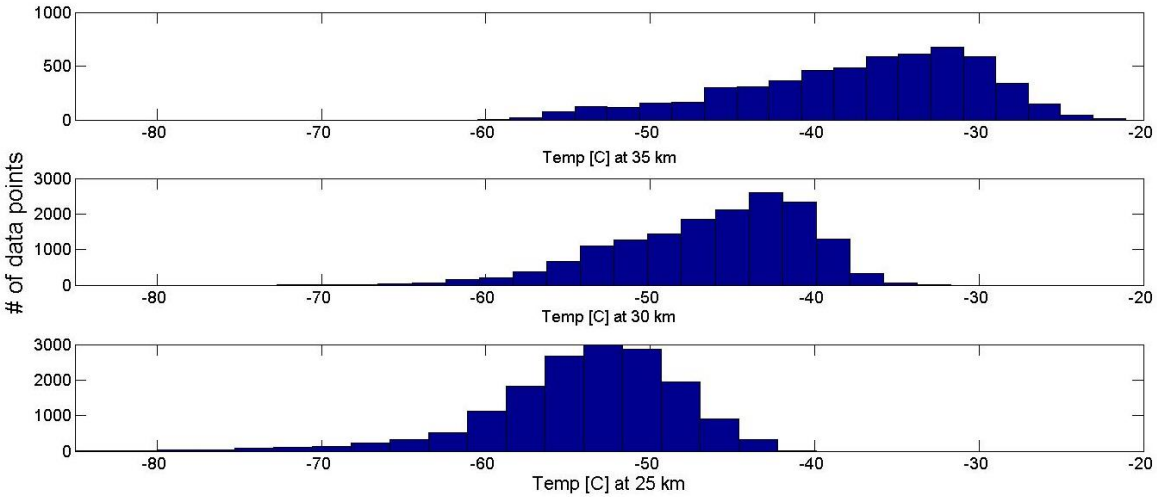

Additional Environmental Parameters

- Solar flux = f(solar zenith, altitude)
- Albedo float: CERES database for all three sites
- Simplified model using blackball radiometer observations
- Broke down “Ground IR” and “Sky IR”, via observed estimated air and ground temperature near launch sites

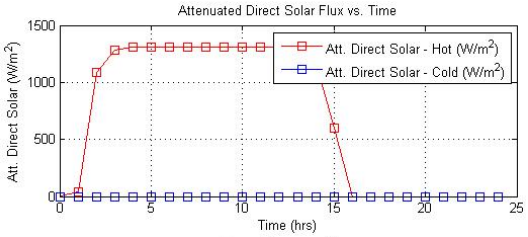

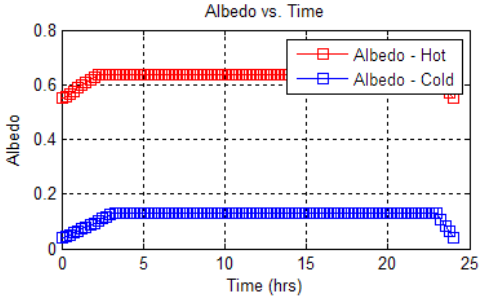

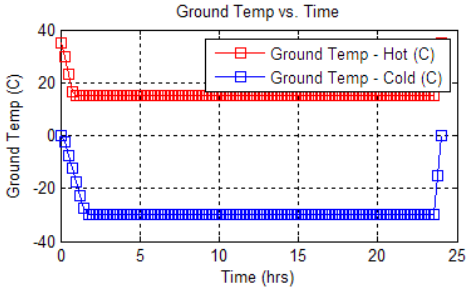

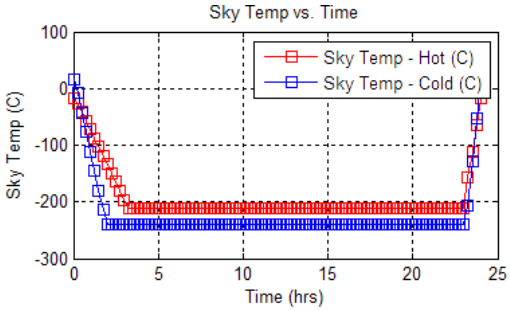

Thermal Requirements

- Hardware Electronics
  - Operating/Non-Operating
- Telescope
  - Non-linear mechanical interfaces and CTE mismatches
  - Minimal STOP analysis limits understanding of thermal-optical sensitivity
- Characterize Thermal Environment
  - Use of inflight PRT's for future flights to reference.

Component	Op Min [°C]	Op Max [°C]	Non-op Min [°C]	Non-op Max [°C]
CDH Box	-15	65	-15	65
Linux Slice	-35	60	-35	60
ARS	-30	30	-40	45
FSM Electronics	-30	50	-30	50
Camera	-30	50	-40	70
Refocusing Stage	-20	30	-25	45
SM Assembly	-72	30	-80	60
PM Assembly	-52	10	-80	60
CFT Struts	-75	2	-80	60

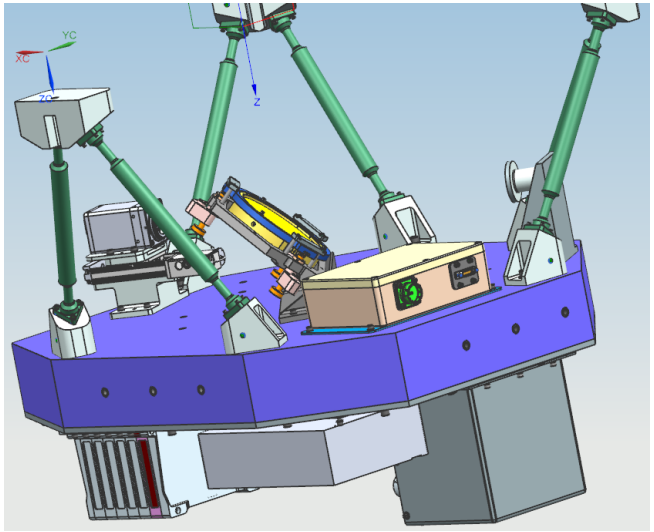

Thermal Requirements

- Telescope
  - Performance sensitive to mirror gradients
  - Shift in focus during observation must be within error budget
  - Shift in focus during flight must be within RFS capabilities
  - Minimal STOP analysis limits understanding of thermal-optical sensitivity

SPATIAL Temperature Gradients Requirements

Requirement During Observation phase only

Component	Geometry/Direction	ΔT(K)
CFT Struts	Horizontally	22
Primary Mirror	Back to Front	8
	Radially Outward	27
Secondary Mirror	Back to Front	1
Optical Bench	FSM to CAM	2

TEMPORAL Temperature Gradient Requirements

Requirement during observation phase only

Telescope Hardware	Temporal AFG ΔT [K/10 min]
CFT Struts	1.5
Bipods	1.5
Optics Bench	1.5
Mandrel	1.5
Strut Mounts on SM	1.5
Primary Mirror	1.5
Primary Mirror Box	1.5
Secondary Mirror	1.5
Secondary Mirror Stack	1.5

Thermal Design

- Telescope and Gondola
  - Passive Design
  - White Paint finish on Gondola
  - Bare aluminum finish on Telescope
  - Pointing Restrictions During Day

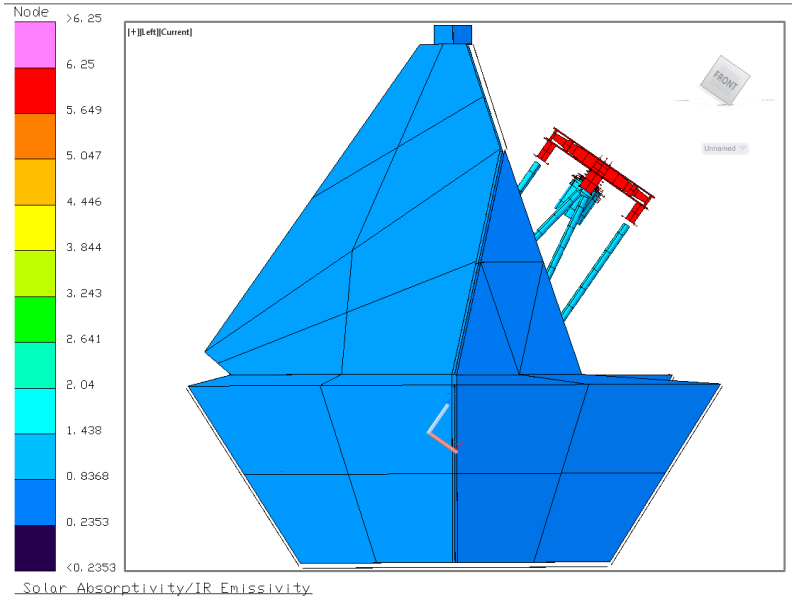

- OBA – Cold Bias
  - Cold bias Design
  - Black Kapton Finish
  - Thermostat controlled Heaters
  - Heater Sizing for Cold Case

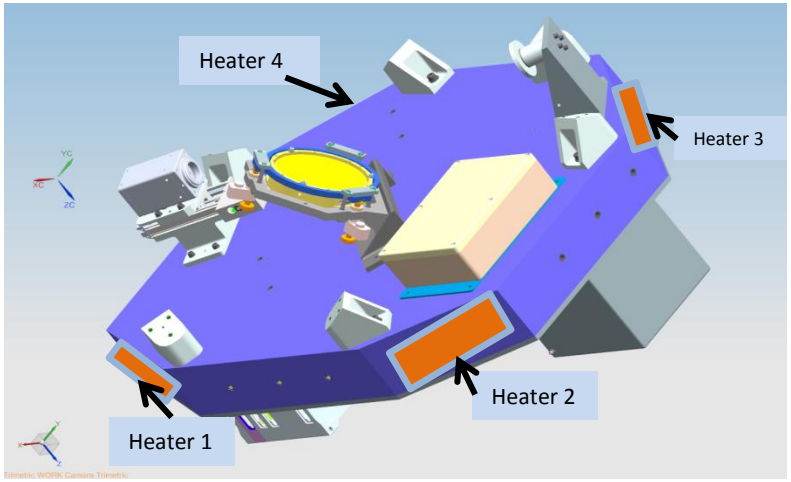

Thermal Model

- Thermal Desktop GMM/TMM
  - Gondola Model by University of Toronto Partner
  - Telescope and Payload JPL
  - Transient analysis
  - CBE heat loads, dimensions, materials, interfaces, and mass
  - Internal and external air convection
  - Heaters, thermostats, and coatings

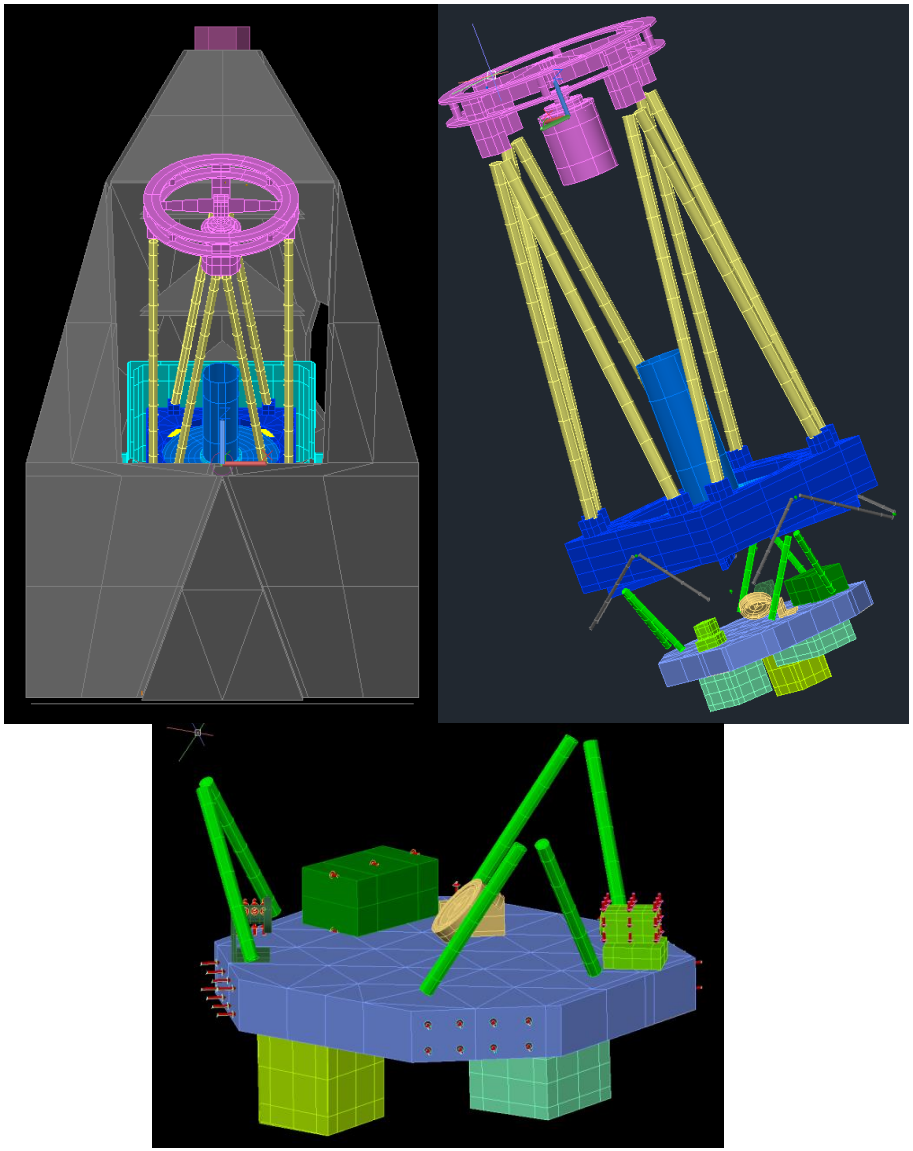

Model Results

- Telescope Predicts
  - <6C Margin for CFT strut hot case
  - Strut not protected from sun
  - Night Temperatures plummet, still holding some margin

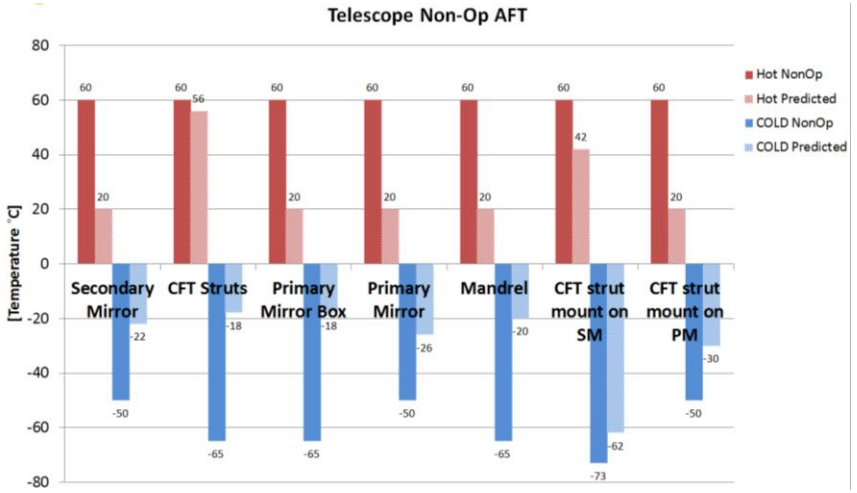

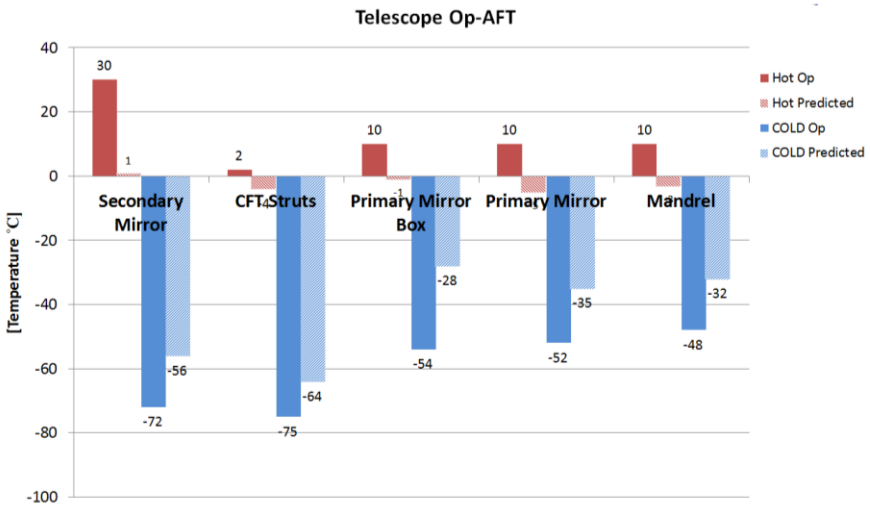

Model Results

- Instrument Predicts
  - Good Margin on Most Hardware
  - Camera noticeably hotter when running.
  - Camera thermally isolated from Optics Bench

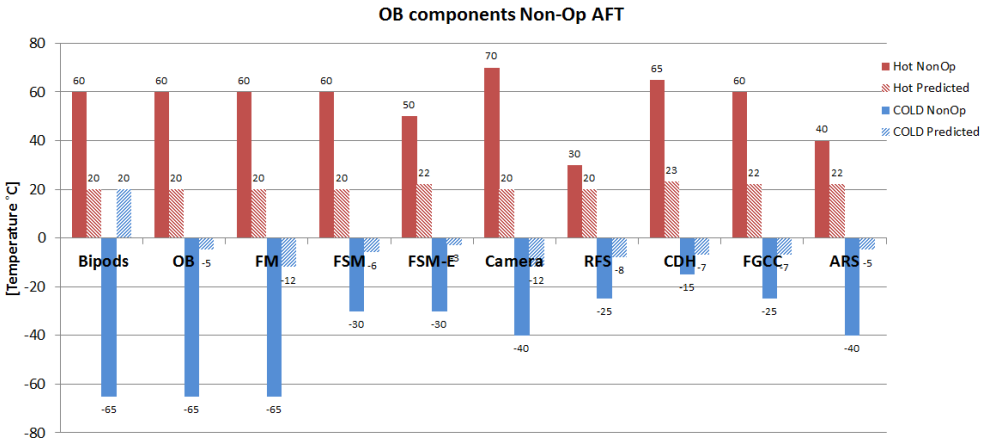

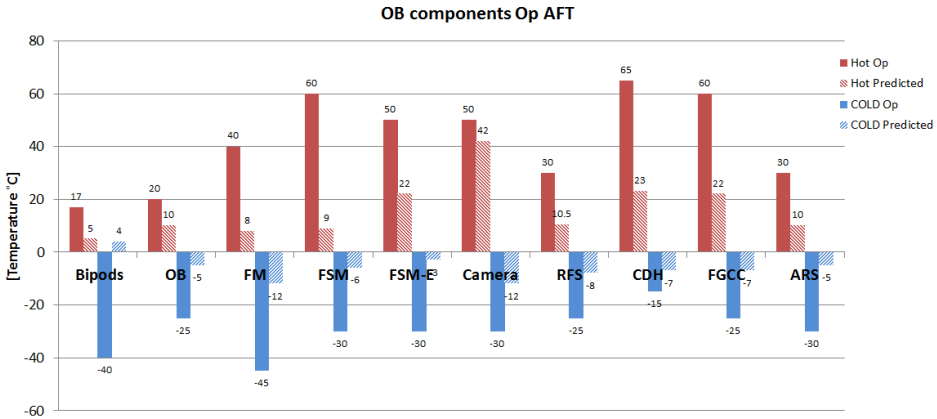

Model Results

- Spatial Gradient Requirements
  - SM gradient and OB gradient small factors to optical error budget
- Temporal Stability Requirement
  - Sensitivity to individual components not fully understood

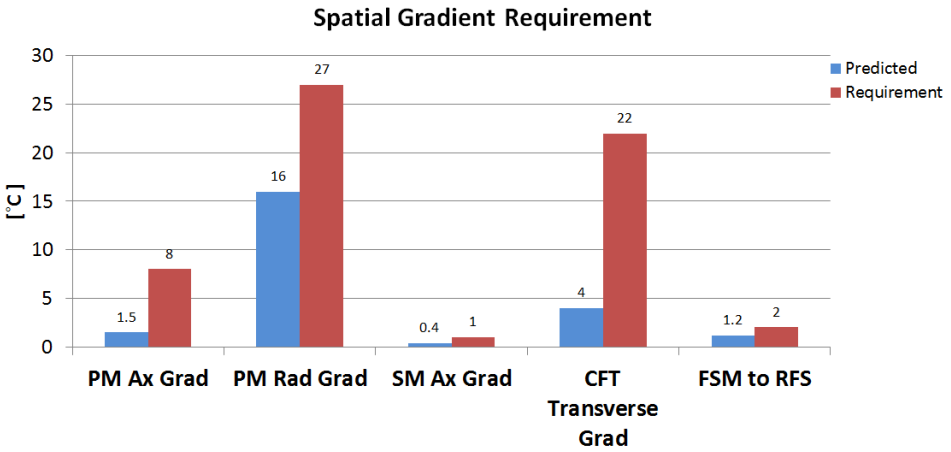

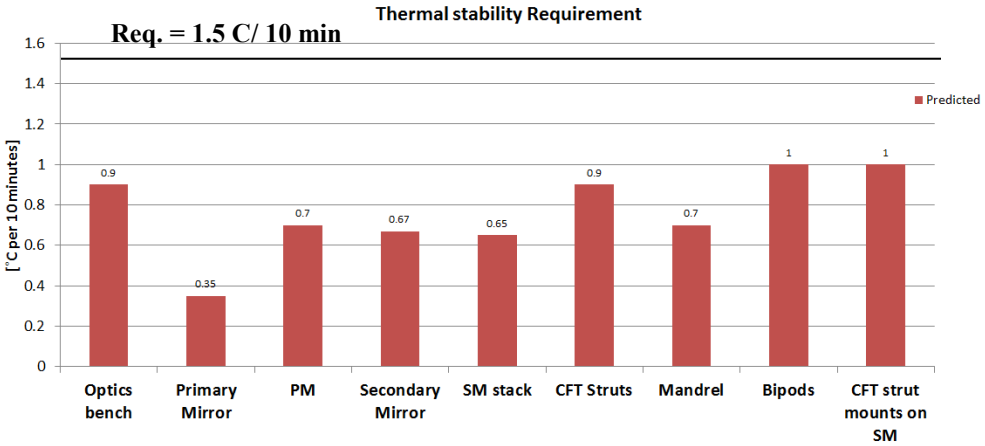

Since CDR Tabletop

- RFS Performance
  - Thrust and homing repeatability issues
  - Min op-temperature increase
  - New heater and thermostat specs
- RFS Conductance Test
  - Original assumption overestimated conductance
  - Reduced Margin in Camera AFT's
- Telescope surface coating
  - Concerns of pointing control during day
  - Bare aluminum in sun

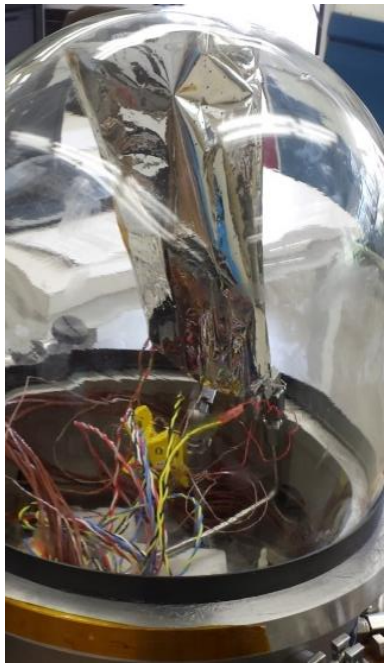

Lessons Learned

- Passive Control Architecture
  - Although low-cost, need adequate reserved resources (i.e. power, radiator area)
- Thermal-Optical-Mechanical System
  - Telescope performance driven by extreme balloon environments and COTS mechanical design
  - Push for an athermalized telescope design early in project phase
- COTS hardware information
  - High risk, low cost projects places less priority on component level TVAC testing and prefer to test at the final assembly level only
  - Place larger weight on COTS hardware information that is readily available during early trade studies

Acknowledgements

- Eric Sunada, Group Supervisor, 353K, JPL
- Robert Effinger, Systems Engineer, 313F, JPL
- Rachael Tompa, Student Co-op, 353K, JPL
- Michael Pauken, Thermal Engineer, 353K, JPL

Backup

ALL RADIOSONDE DATA

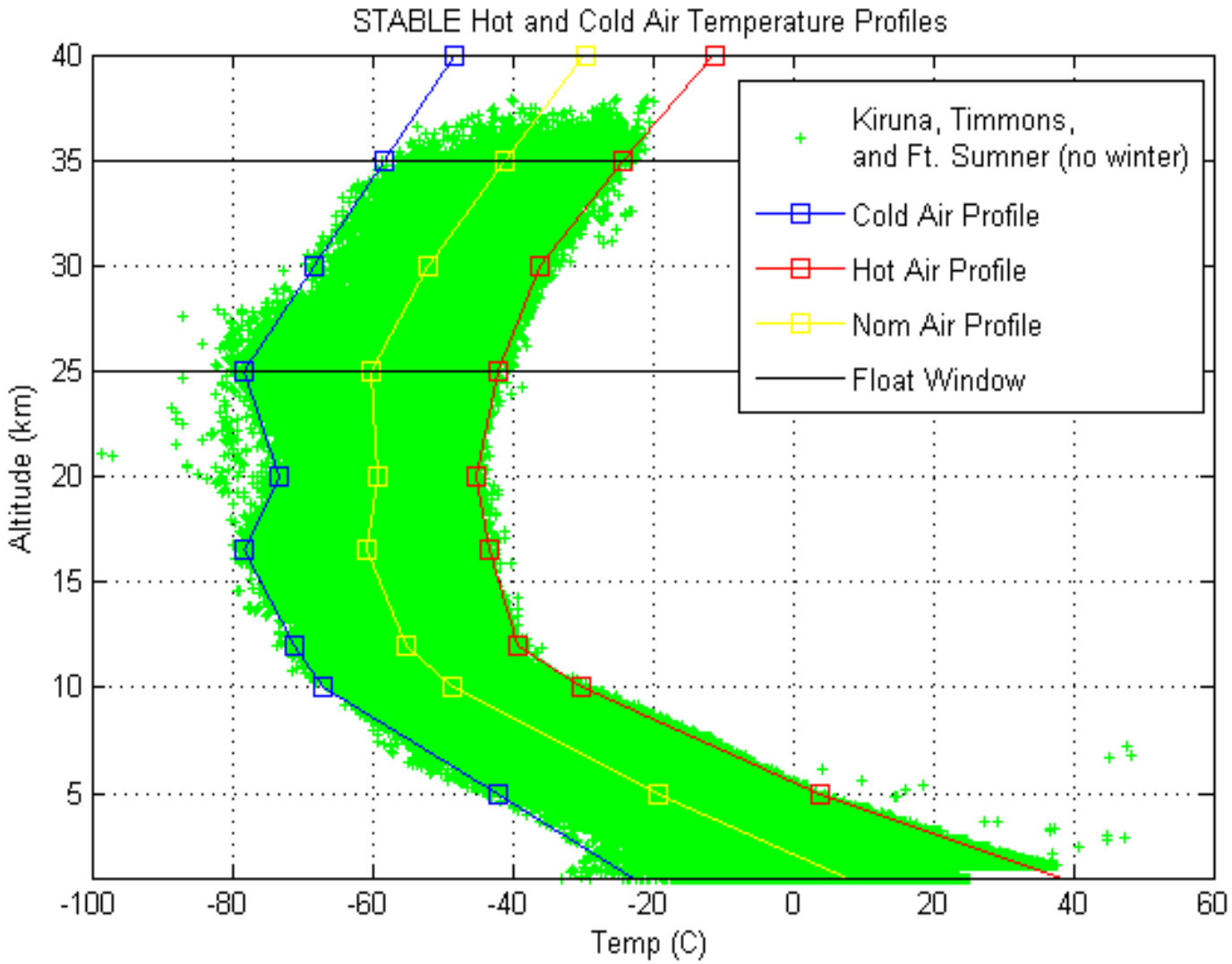

Allowable Flight Temperatures

STABLE HARDWARE	Temperatures Apply at	Allowable Flight [C]			
		Operational		NonOperational	
		Min	Max	Min	Max
Telescope Assembly					
Secondary Mirror	Bulk Avg	-72	30	-80	60
CFT Struts	Surface-- Extreme Node	-75	2	-80	60
CFT strut mount on PM	bulk avg	N/A	N/A	-73	60
CFT strut mount on PM	bulk avg	N/A	N/A	-35	60
Primary Mirror Box	Bulk Avg -- Extreme node	50	10	-80	60
Primary Mirror	Bulk Avg	-52	10	-80	60
Primary Mirror Mandrel	Bulk Avg	-48	10	-80	60
OB Assembly					
Structures					
Aluminum Bipods	Surface -- Extreme Node	-40	17	-65	60
Optics Bench	Surface -- Extreme Node	-25	20	-65	60
Optics					
FSM Optic Mount	Bulk Avg	-50	55	-50	55
FSM Stack	Bulk Avg	-30	60	-30	60
Fold Mirror	Bulk Avg	-45	40	-65	60
Bobcat Imperx Camera	Surface -- Extreme Node	-30	50	-40	70
Refocusing Stage (RFS) Bench mount	Bulk Avg	-20	30	-25	45**
Electronics					
CDH Bench Mount	Bulk Avg	-15	65	-15	65
Linux Slice Mount	Bulk Avg	-35	60	-35	60
FSM Electronics Box (Bench Mount)	Bulk Avg	-30	50	-30	50
ARS Bench Mount	Bulk Avg	-30	30	-40	45**

**** Per PDR RFA, new Ground handling AFT**