Numerical Modeling of Thermal Stratification in Cryogenic Propellant Tanks

Xiao-Yen Wang/NASA GRC
Jonathan Harrison/Gamma Technologies
Andy Noonan/Gamma Technologies
Pooja Desai/NASA JSC

Thermal & Fluids Analysis Workshop
TFAWS 2018
August 20-24, 2018
NASA Johnson Space Center
Houston, TX

Contents

- Introduction
- Cryogenic tank modeling approaches
  - CFD versus engineering approach
- SHIIVER tank modeling
  - Thermal Desktop (TD) versus GT-suite
- Stratification modeling validation
  - GT-suite versus Daigle's Matlab code:
    - "Temperature stratification in Cryogenic Fuel tank", Matthew Daigle, NASA Ames Research Center, Journal of Thermophysics and heat transfer, Vol 27, No. 1, January-March 2013
  - Spherical LOX tank modeling
    - TD 2 nodes model
    - GT 2 nodes model
    - GT 20 nodes model
- Conclusions

Introduction

- **The boiling-off rate of cryogenic propellant inside the tank is always one of the major factors to be considered for the design of thermal insulation around the propellant tank and space launch system.**
- **Thermal stratification inside the tank is important to be included in the model for an accurate prediction of the boiling-off rate for different thermal insulation systems of propellant tanks.**
- **Numerical modeling of thermal stratification can be full-scale computational fluid dynamics (CFD) analysis or engineering modeling tool using lumped-parameter method.**

Cryogenic tank modeling approaches (I)

- **Computational Fluid Dynamics --- ANSYS Fluent, Flow-3D**
  - **Model details of the phase change, heat transfer, boundary layer, etc ….**
  - **Involves turbulence model, numerical algorithm, multi-phase model, mesh resolution**
  - **1g and micro-gravity**
  - **Parallel computing to speed up turn-around time**
  - **Quantify the uncertainties of turbulence model, numerical algorithm, multi-phase model**
- **Simulation using Engineering modeling tools (1D model, Thermal Desktop/SINDA-FLUINT, SINDA-FLUINT stand-alone, GFSSP)**
  - **Fast, quick turn-around time, reasonable accuracy**
  - **Identify the assumptions and limitations of the engineering models used**
  - **Thermal Desktop standard tank model**
  - **Thermal Desktop stratified cryogenic tank model**
  - **SINDA-FLUINT stand alone tank model**
    - **GRC, Barbara Sakowski (SINDA/FLUINT stratified tank modeling, TFAWS 11-2014)**
    - **KSC, Paul Schallhorn (Upper stage tank thermodynamic modeling using SINDA/FLUINT, TFAWS 07-1007)**

Cryogenic tank Engineering modeling approach

Thermal Desktop/SINDA-FLUINT tank models:

1. Standard way: one node for the vapor region and one node for the liquid region to model the cryogenic fluids inside the tank, the phase change, heat transfer and mass transfer between the liquid and vapor.
2. Stratified cryogenic tank model:
   The tank has to be cylindrical. The logic coding has to change if it is not a cylindrical tank. The tank only has nodes along the height. The junction lumps are manually connected to the tank lumps one by one.

GT-SUITE:

- Uses similar approach and provides an interface which allows users to utilize multiple nodes for the fluids then couple the fluids to the thermal nodes on the solids/structure (radiation, conduction and convection)
- First cut effort to explore an option for tank stratification modeling

Background of SHIIVER tank modeling

- **The Structural Heat Intercept, Insulation, and Vibration Evaluation Rig (SHIIVER) consists of a large cryogenic tank assembly with geometry, support structure, skirt and fluid penetrations comparable to an actual space flight vehicle configuration, such as EUS LH2 tank.**
- **SHIIVER will be used to investigate three main areas:**
  - **structural cooling using tank boil off vapor to intercept conductive heat leak**
  - **design, construction, and performance of MLI on a large flight tank configuration**
  - **MLI blanket durability under launch acoustic vibration conditions**

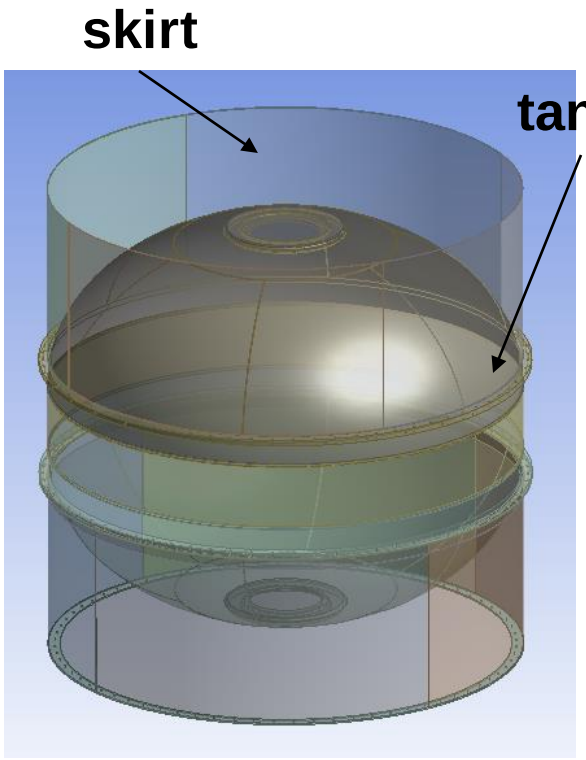

Thermal Desktop (TD) SHIIVER Tank Model

- **Geometry includes tank** (FWD dome, barrel, AFT dome), FWD skirt and AFT skirt, vapor cooling tubes on FWD skirt, FWD flange, AFT flange
- **Inside the tank:** use twin lump to model the convection and phase change and pressure of the fluids
- **Pressure control of the tank**: use PID controller
- **Heater control**: use logic to turn on or off the heaters, heater are on FWD dome
- **Heater power:** define as a register to vary the power

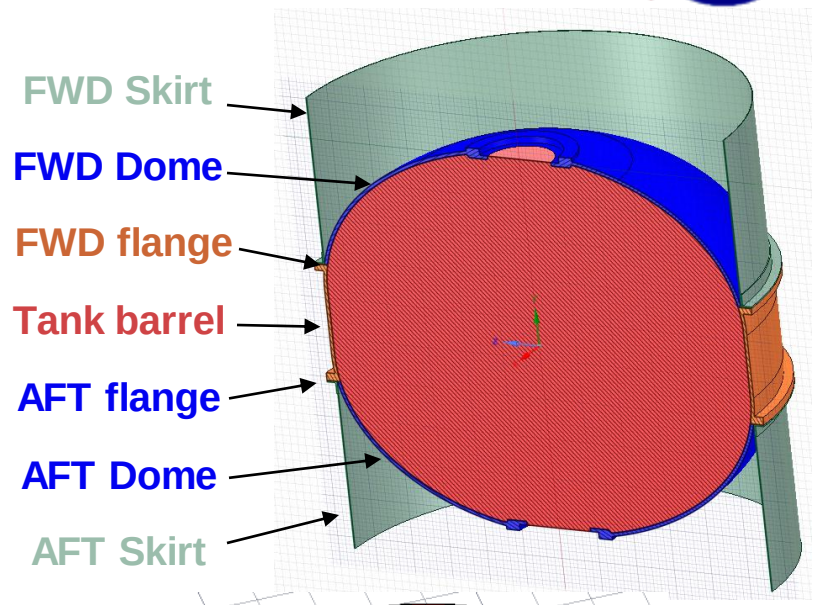

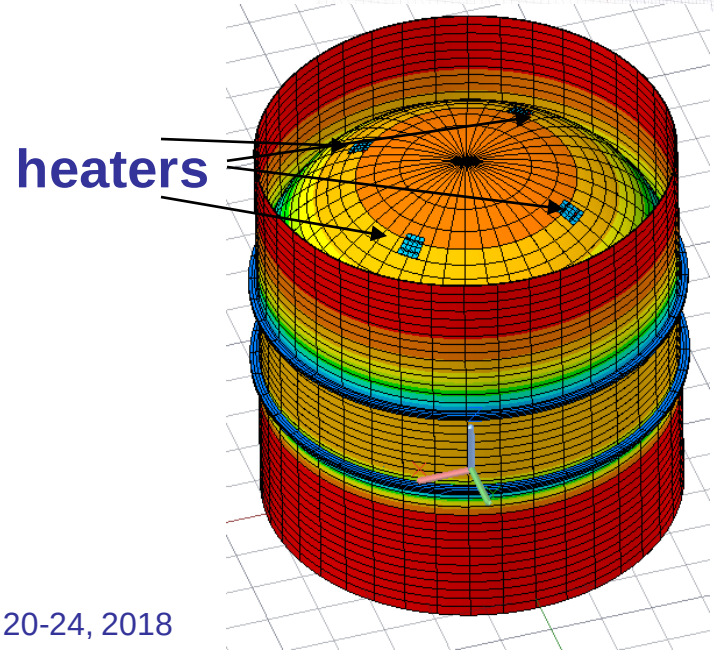

Case run for SHIIVER tank model

- **Initial conditions:**
  - Tank pressure = 2e5 Pa
  - Vapor temperature = 25 K
  - Liquid temperature = 20 K
  - Skirt wall temperature = 293 K
  - Tank wall temperature = 20 K
- 33% ullage GH2
- Environment: 293 K, radiation only
- No venting
- Heaters are OFF
- Vapor cooling is OFF
- Transient run to 5400 s (1.5 hr)
- Both TD and GT-suite run the same case

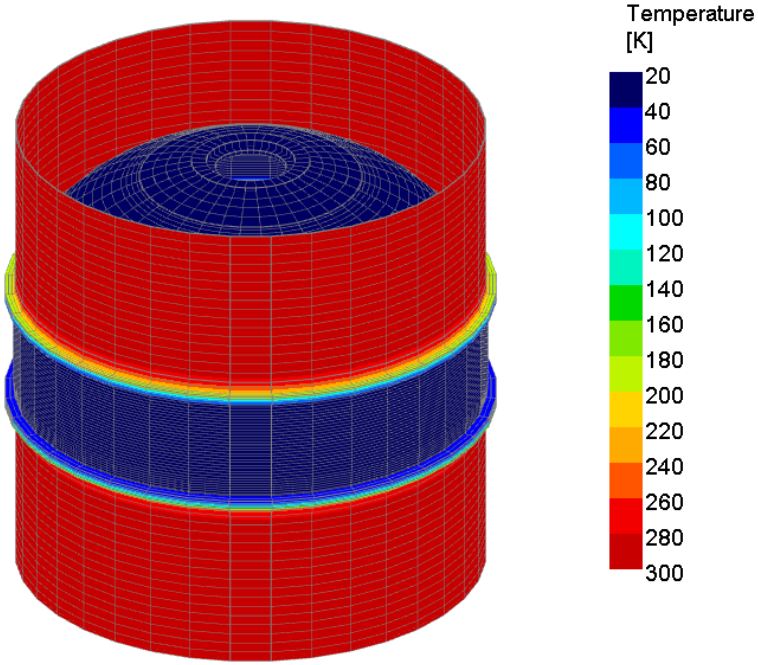

t = 0

SHIIVER Tank TD model Results

Temperature Contours

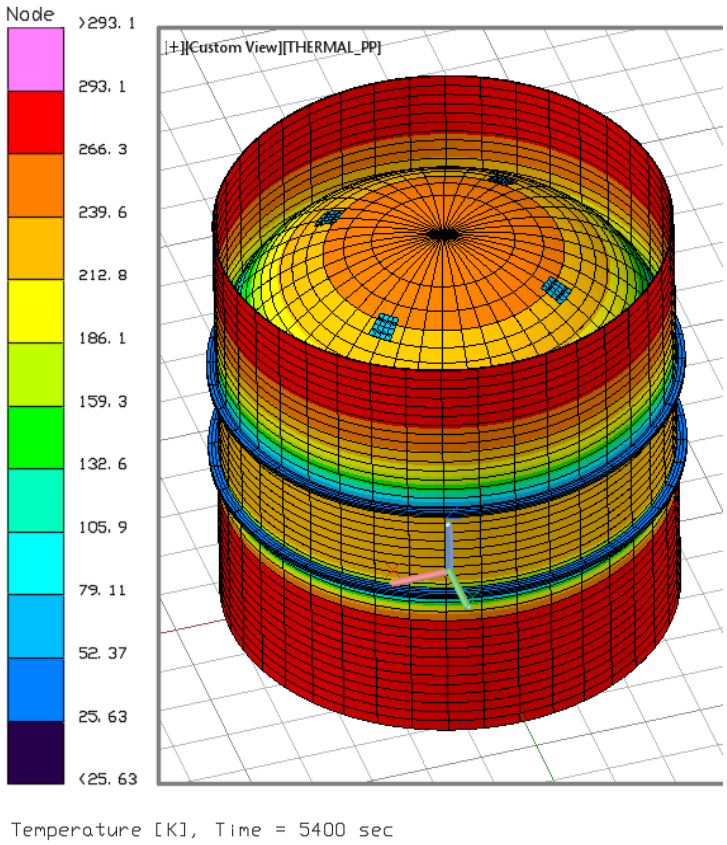

SHIIVER tank assembly (plotted with SOFI on the tank)

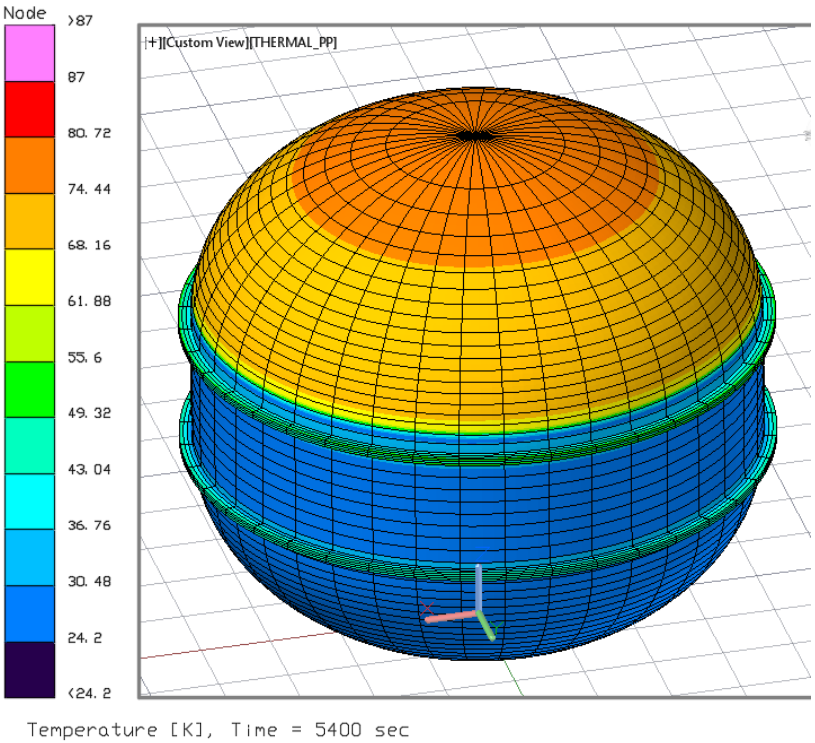

tank alone (plotted without SOFI)

GT-suite Model for SHIIVER tank

1. Discretize the fluid volume into 20 subvolumes

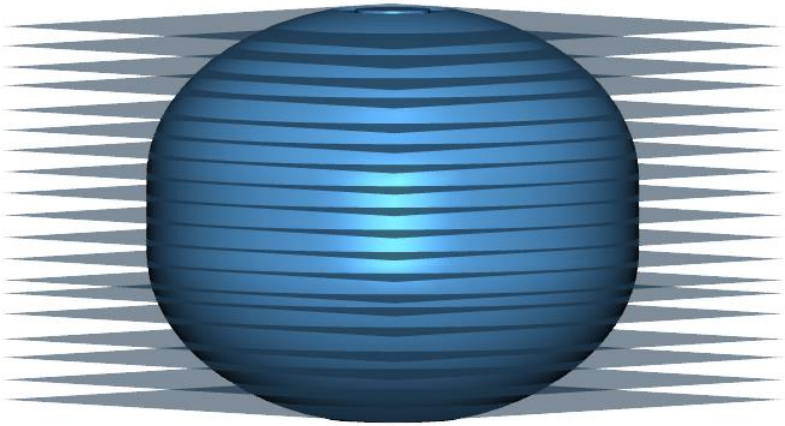

2. Create FE mesh on FWD skirt, FWD flange, FWD dome, tank barrel, AFT skirt, AFT dome, and AFT flange and AFT skirt

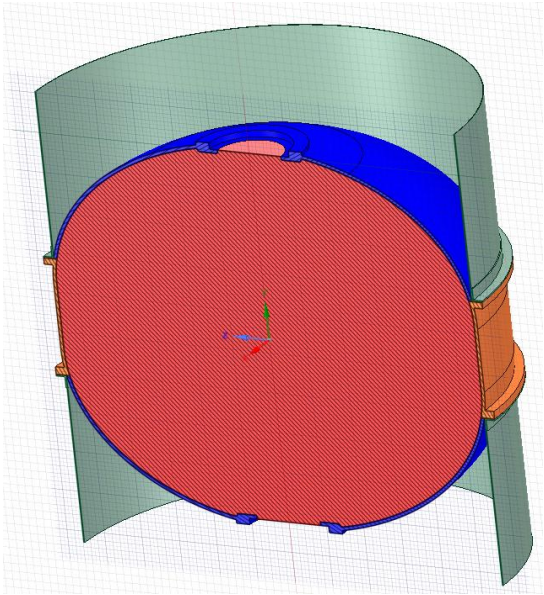

3. Build thermal ports between tank walls to fluids for fluid-thermal interaction
4. Thermal ports between the thermal structure (contact resistance)
5. Boundary condition between thermal structure to the ambient (radiation)

Schematics of GT-suite SHIVER tank model

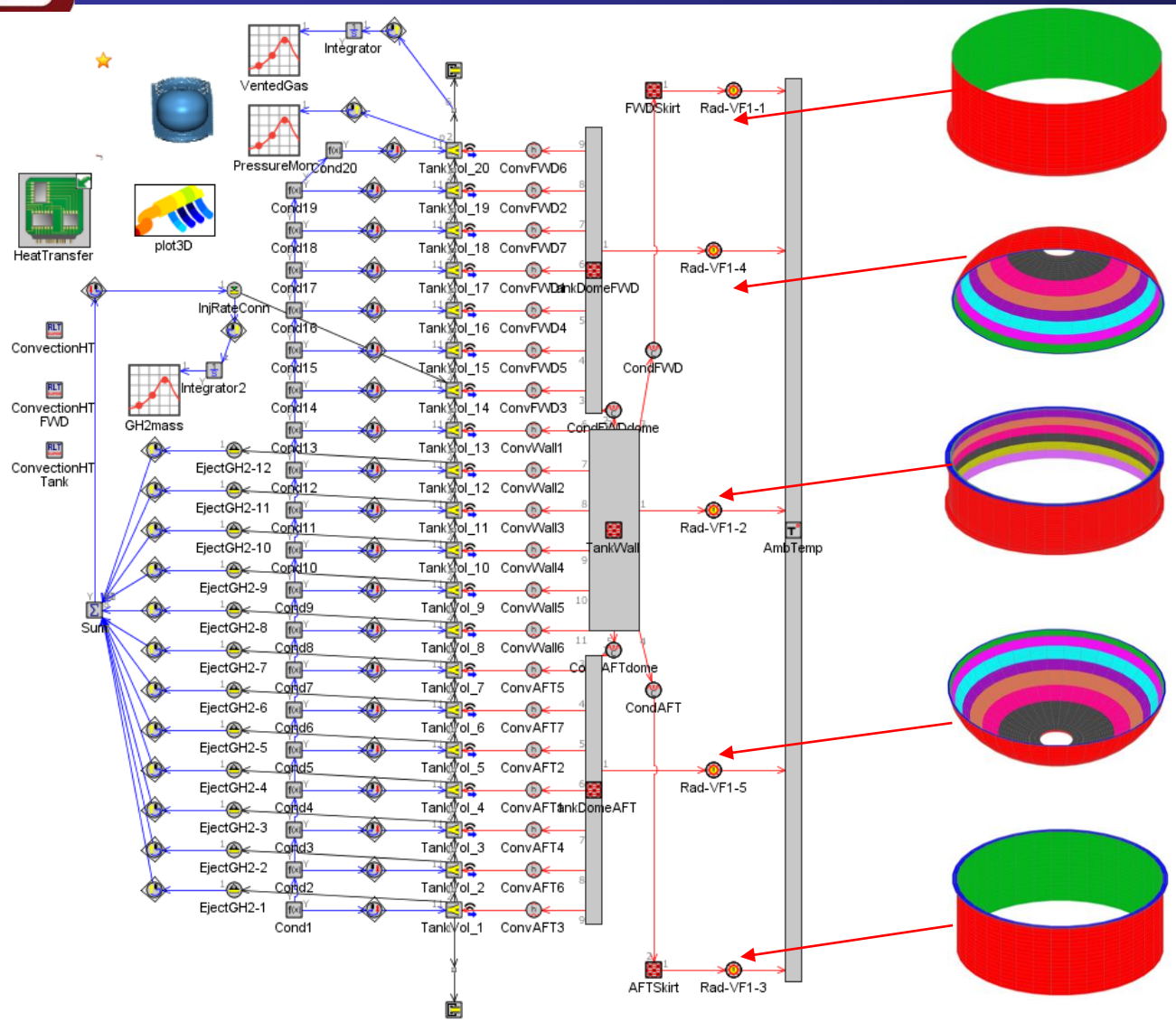

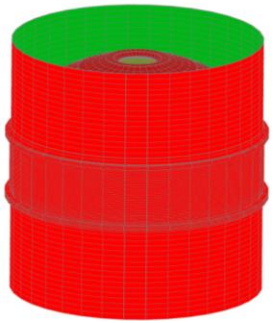

- Ports in red subject to radiation at 293K
- Green ports on skirt are adiabatic

Schematics of GT-suite model

SHIIVER tank model results comparison

- Tank Wall Temperatures @ 5400sec
  - The temperature is more in line with the TD result, though with more pronounced stratification as expected since there are more discretized fluid volumes

TD

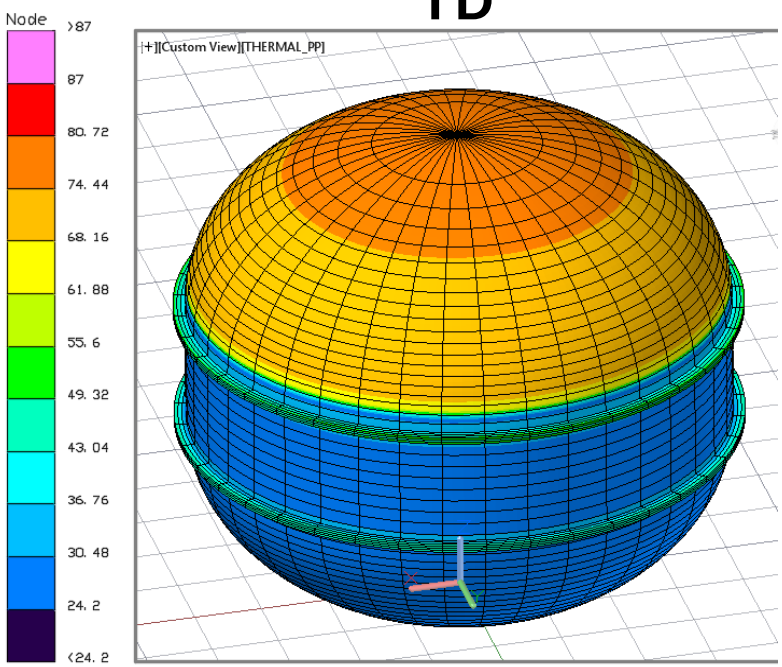

Temperature [K], Time = 5400 sec

GT-suite

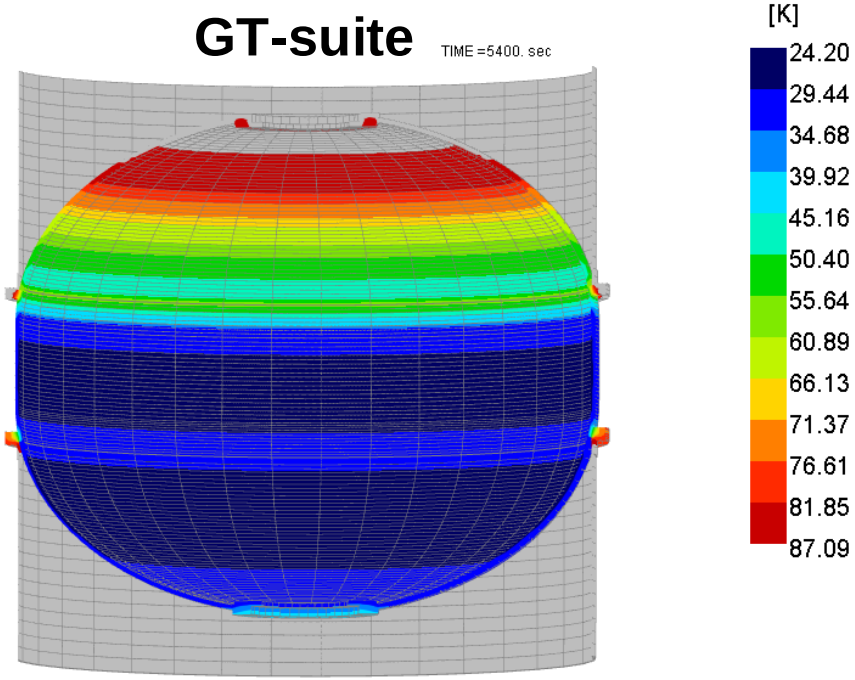

***Gray color indicates temperature above or below color scale**

SHIIVER tank model results comparison

- Fluid temperature
  - there is significant thermal stratification, liquid temps are higher than the TD liquid temp, while gas temps are for the most part lower than TD gas temp

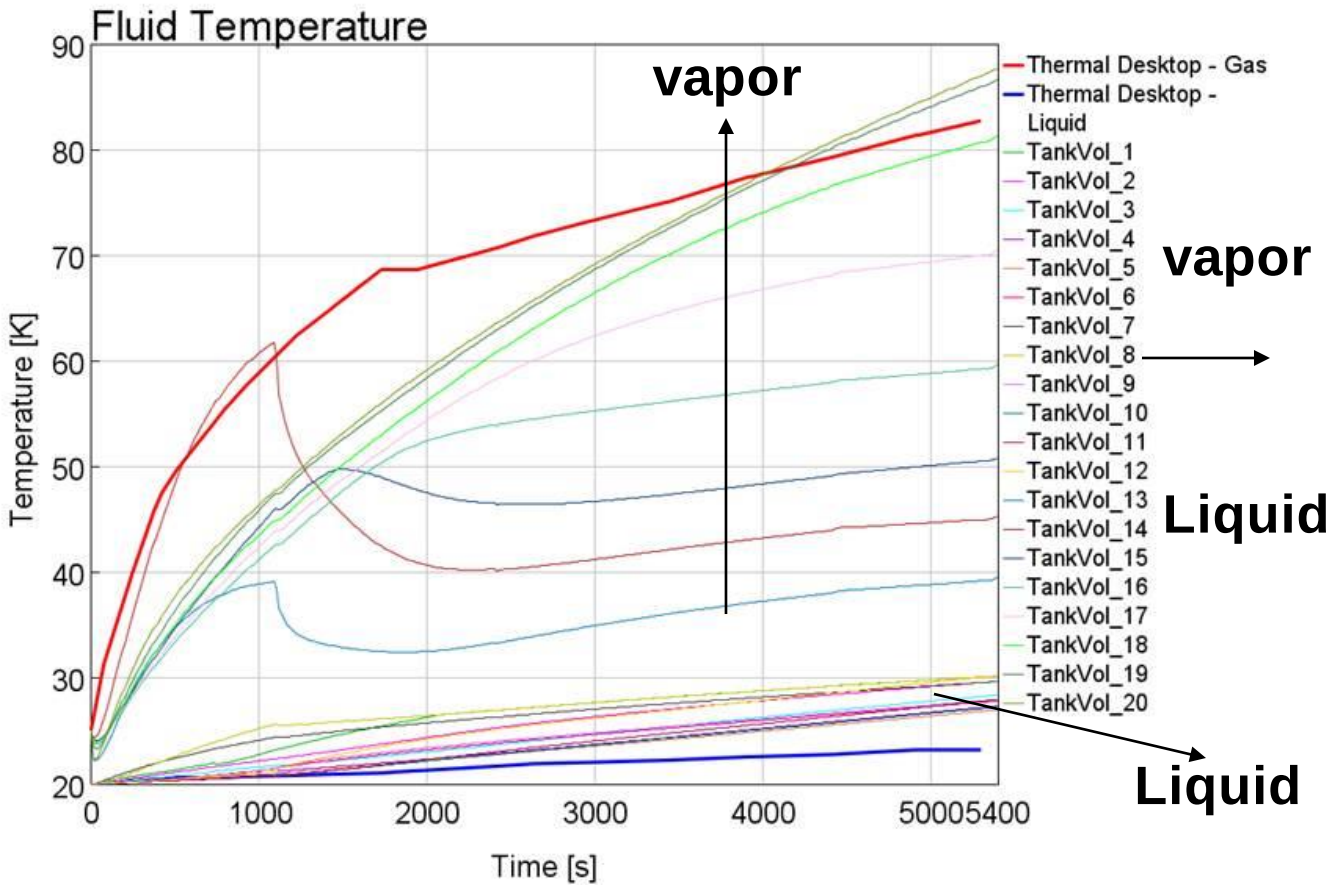

SHIIVER tank model results comparison

- Fluid pressure
  - the pressure more closely matches the TD result

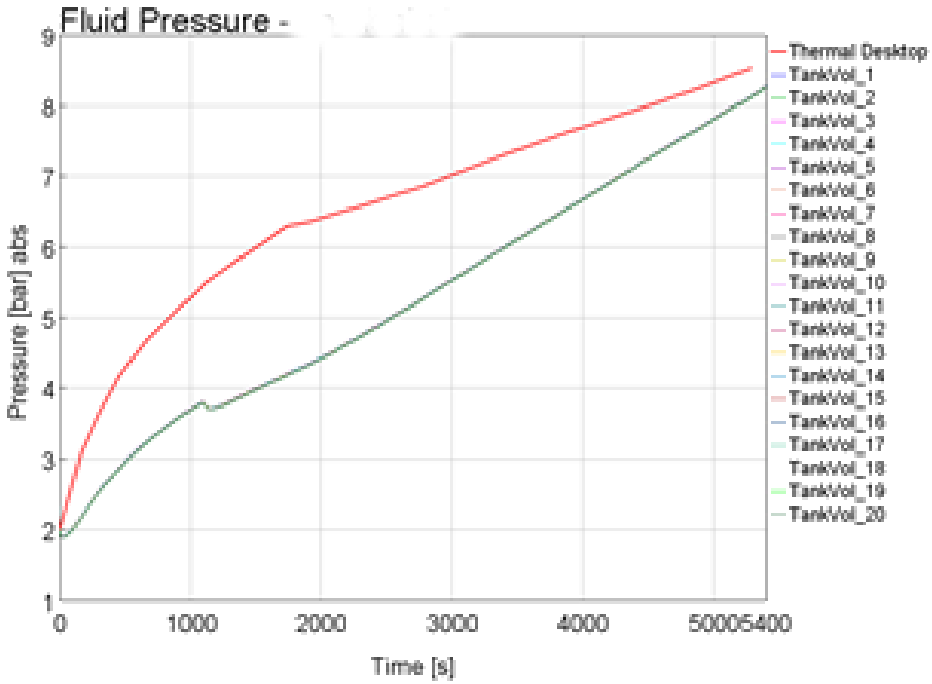

- LH2 Boiled Off
  - GT shows that there is a significant amount of boil off of the bulk liquid than the TD predicts.

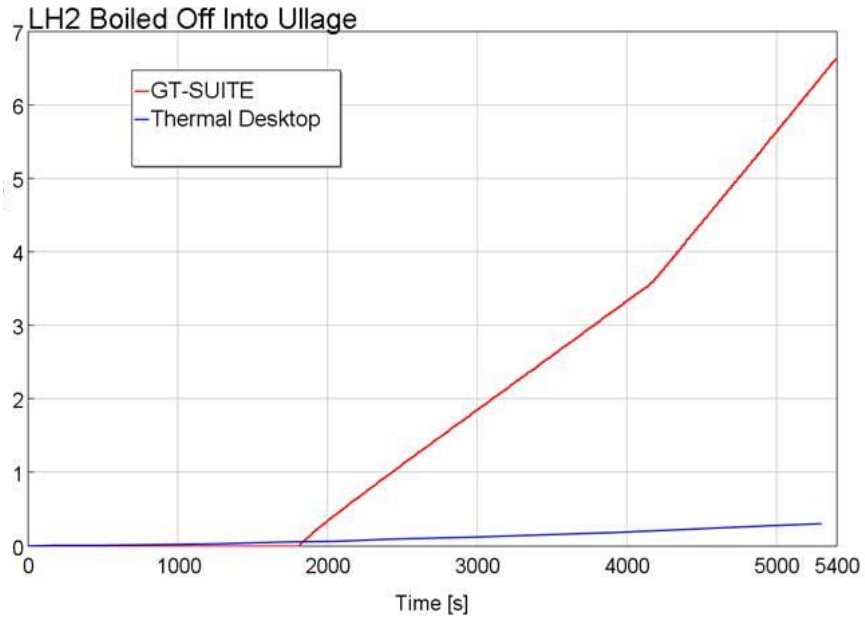

Summary of SHIIVER tank models

- There are discrepancies between TD twin lump model and GT-suite 20 node model.
- Major factors can be contributed to the discrepancies:
  - How the heat transfer coefficients are computed
  - How the interface of vapor and liquid is modeled
  - Boundary layer effect
  - Material and fluid properties
  - 2 nodes versus 20 nodes for the fluid
- Need to validate the stratification effects predicted by GT-suite SHIIVER tank model.

Validation of tank stratification

- **Work on Daigle's cases for stratification validation**
- **Quantify the effect of the stratification effects:**
  - **A simple spherical LOX tank:**
    - **TD 2 nodes versus GT-suite 2 nodes**
    - **GT-suite 2 nodes versus GT-suite 20 nodes**

Stratification modeling validation: Daigle's case

Tank in storage without venting

Daigle

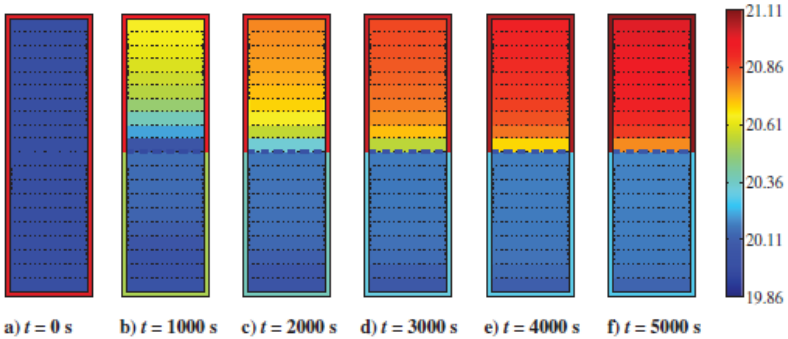

Fig. 12 Tank in a storage regime without venting at normal gravity: temperature stratification.

GT

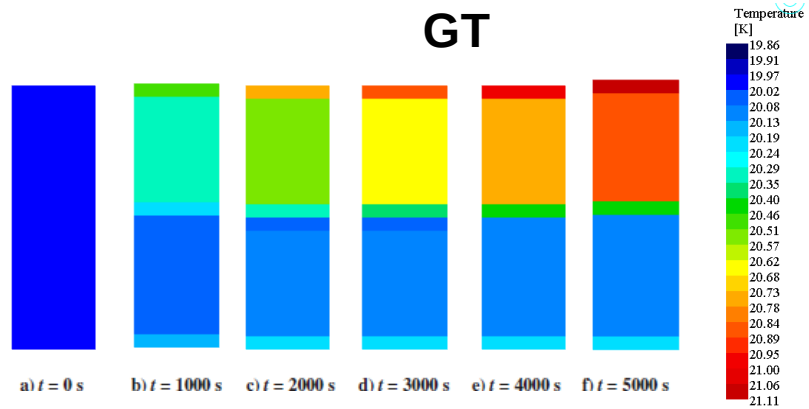

- The cylindrical tank is similar to that of space shuttle ET
- Radius of the tank is 4.28 m and the height is 30 m.
- Tank has 50/50 liquid/ullage ratio
- Liquid is LH2, Vapor is mixture of GH2/GHe
- Heat from environment to the tank is 10 kw
- No venting
- Transient run to 5000 s
- GT-suite follows the details on modeling the stratification, however Boundary layer effect is not included yet, slight difference in vapor and fluid interface treatment.

Tank in storage without venting

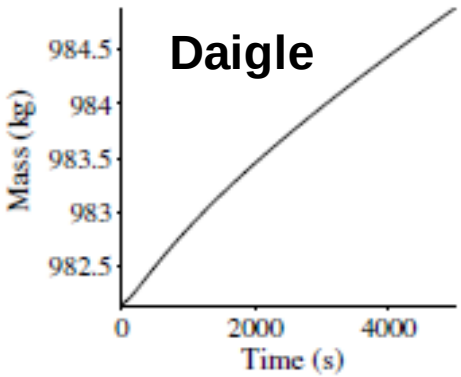

a) GH2 Mass

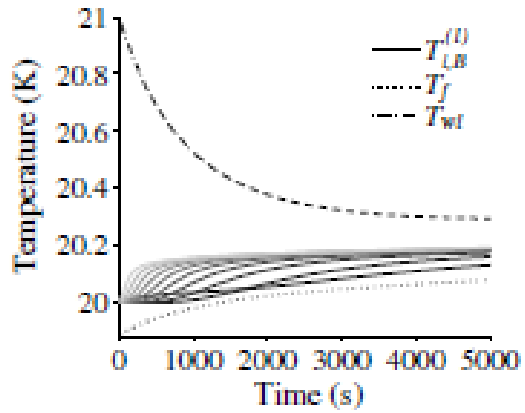

b) LH2 Temperatures

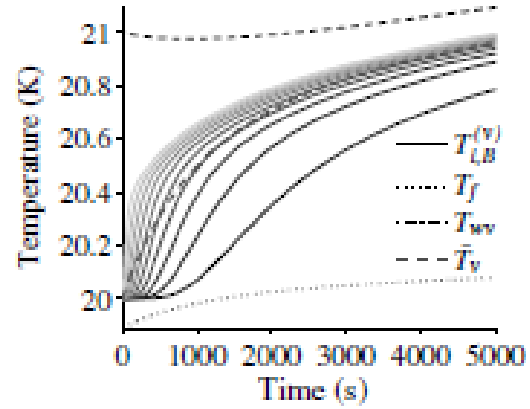

d) GH2/GHe Temperatures

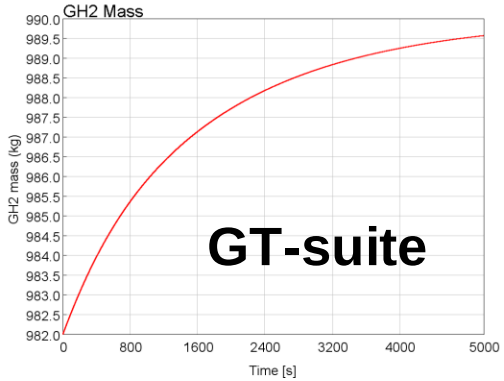

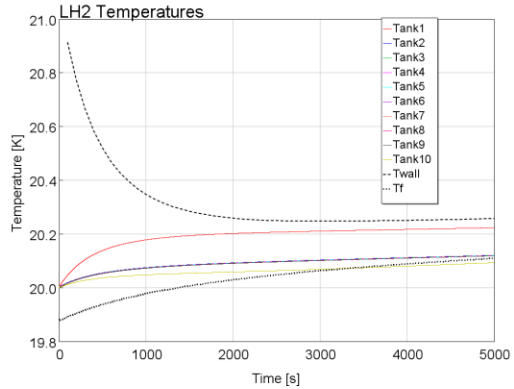

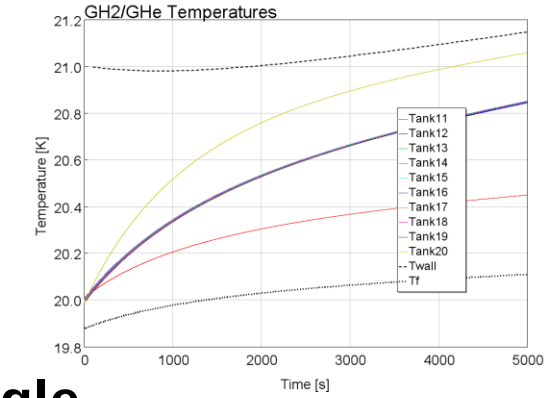

- **GT results show the similar trend as Daigle**
- **GT Results of boiling off roughly 2x as much as Daigle**
- **Top and bottom of the tank are hotter than Daigle's results**
- **Boundary layer effect is a key factor.**
- **Need more investigation to get better agreement.**

Stratification modeling validation: spherical LOX tank

- Radius of sphere: 23 inches (0.5842 m)
- Tank wall material: SS 304
- Thickness of wall: 0.25 inches (0.00635 m)
- Tank wall temp: 96.0 K
- Liquid prop temp: 95.0 K
- Vapor temp: 96.0 K
- Void (ullage) fraction: 50%
- Pressure: 25 psia (172330 pascal)
- Ambient condition: 293 K, vacuum, radiation only

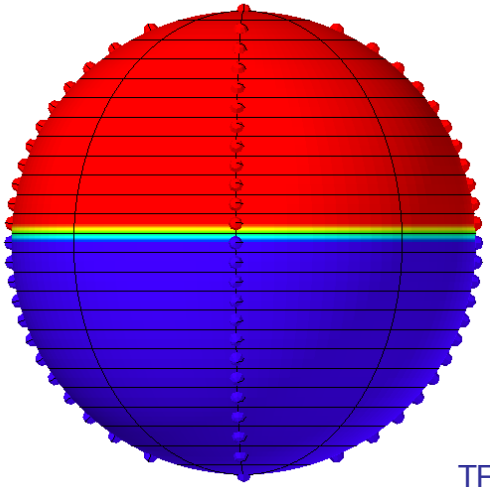

- TD model with twin lump
- GT-suite model with twin lump
- GT-suite with 20 nodes for the fluids

Spherical LOX tank: Ullage Temperature

- All three models show similar trend, though the GT 20 volume model with mass averaged temperature over all 10 ullage volumes is the coldest over time
- Significant thermal stratification is shown in the ullage volume
- GT 20 nodes model shows a warmer bottom, due to high surface volume ratio
- With Boundary layer effect, this might not happen

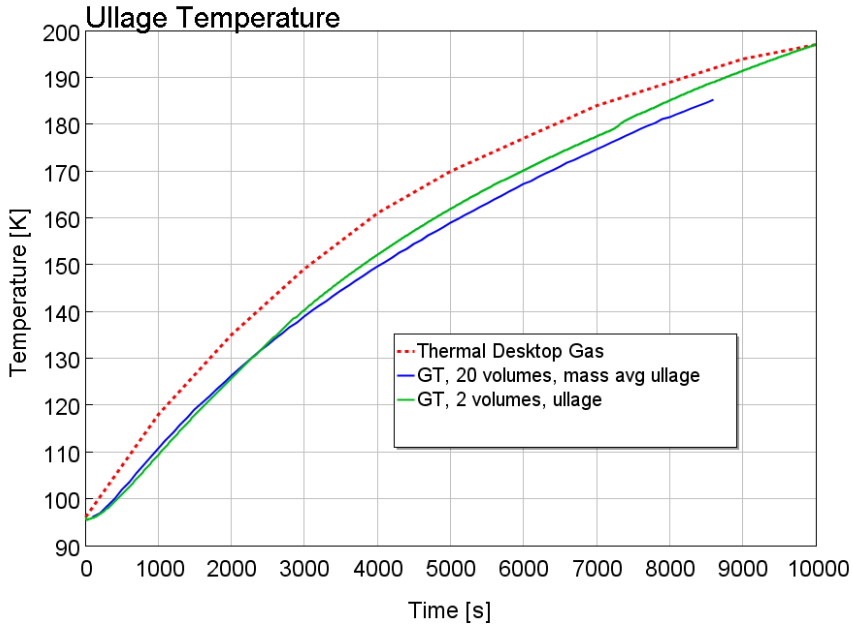

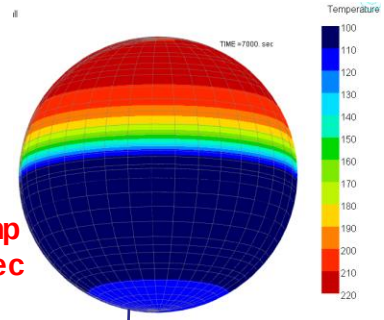

Wall temp at 7000sec

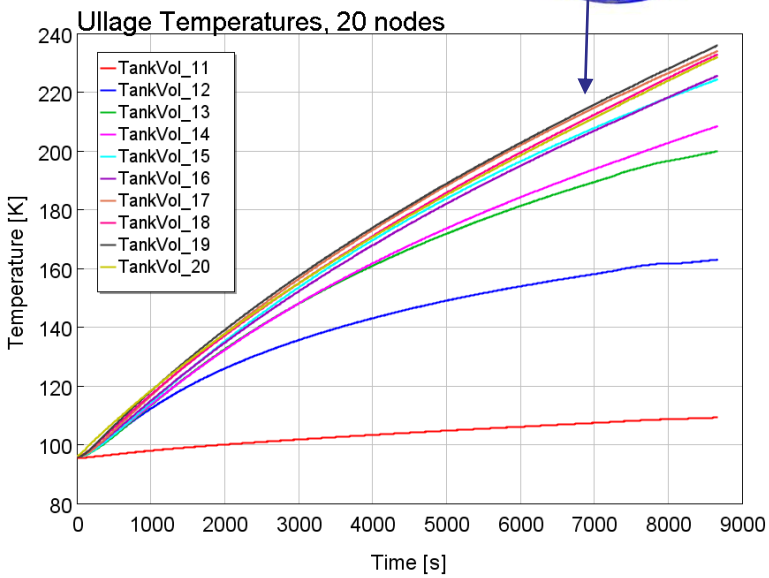

Spherical LOX tank: Liquid Temperature

- **All three models show similar trend**
- **The 20 node model shows significant thermal gradient in the liquid region**

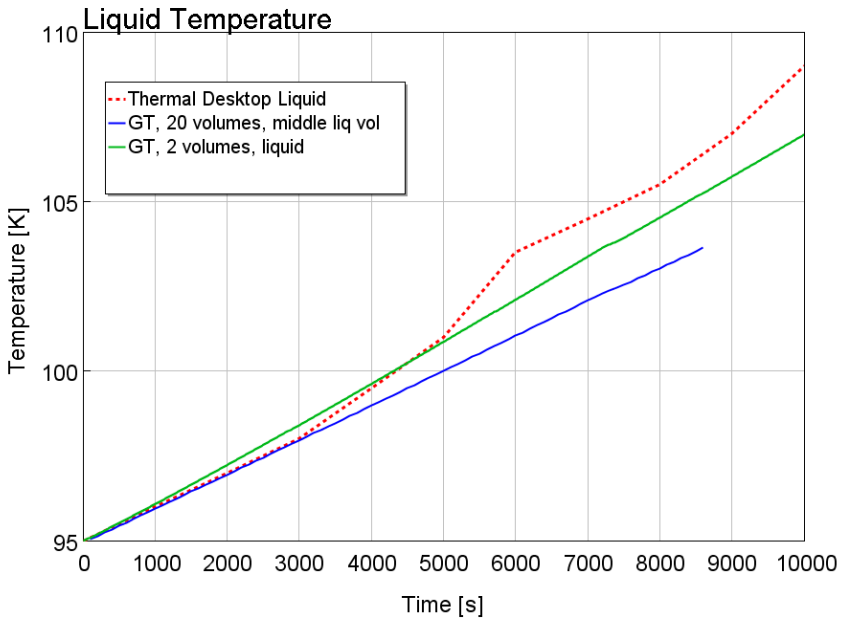

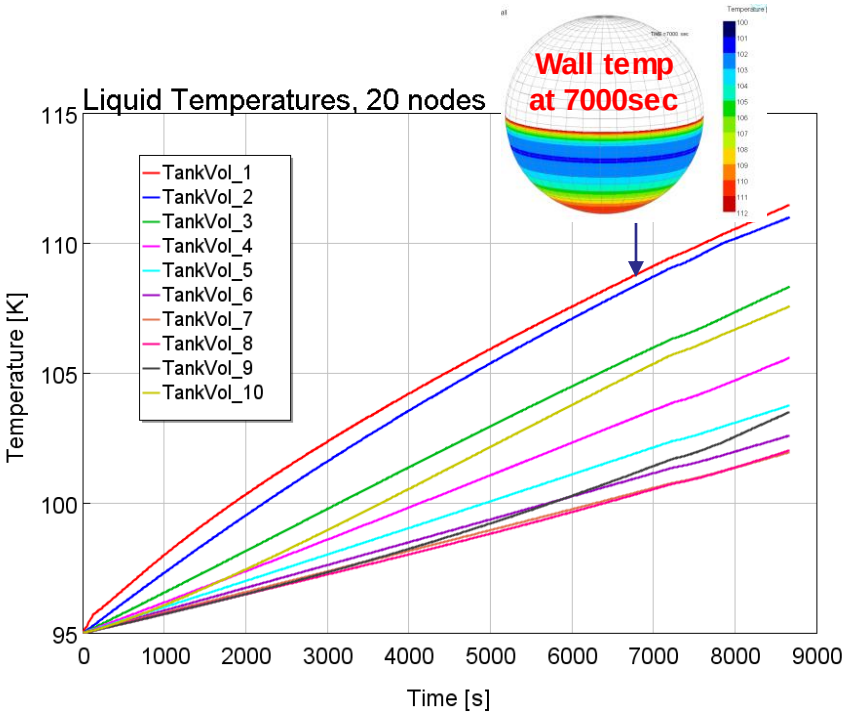

Spherical LOX tank: Tank Pressure

- **GT 2 node model shows very similar trend as Thermal Desktop 2 node model**
- **GT 20 node model shows a higher trend**

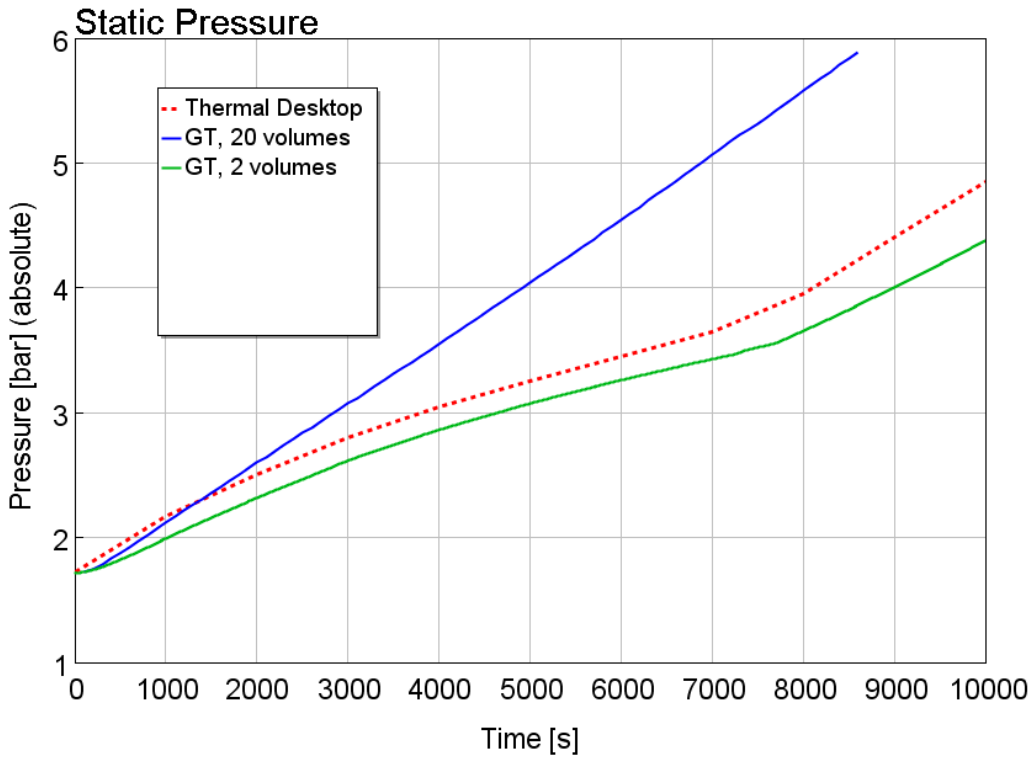

Conclusions

- SHIIVER tank model efforts have been presented
  - TD thermal model with twin lump for the fluids
  - GT-suite model with 20 nodes for the fluids
  - Attempt to address the thermal stratification effect to get a more accurate boiling-off rate and vapor temperature near the venting line
- Tank stratification modeling first cut efforts have been presented. It is a work in progress and aims to provide users an option to explore.
  - Daigle's case is modeled using GT-suite to validate the details of stratification physics.
  - A simple spherical LOX tank model results are compared between 1) TD with twin lump, 2) GT-suite with 2 nodes and 20 nodes for the fluids.

Acknowledgements

- **Great appreciations go to tech support at C&R tech, valuable help from David Johnson and Mark Welch; Barbara Sakowski and Robert Buehrle at GRC for reviewing the charts; NASA GRC eCryo project for funding this work.**