Progress Towards Modeling a Rapid Cycle Adsorption Pump for CO_2 Compression

Lisa Erickson, NASA JSC
Anthony Iannetti, NASA GRC
Hashmatullah Hasseeb, NASA GRC

Presented By
Anthony Iannetti

Thermal & Fluids Analysis Workshop
TFAWS 2018
August 20-24, 2018
NASA Johnson Space Center
Houston, TX

Adsorption Pump Concept

- Rapid Cycle Adsorption Pump (RCAP) Purpose:
  1. Separate carbon dioxide (CO_2) from the Mars atmosphere.
  2. Send pressurized CO_2 to downstream processes in a Martian In-Situ Resource Utilization Plant.

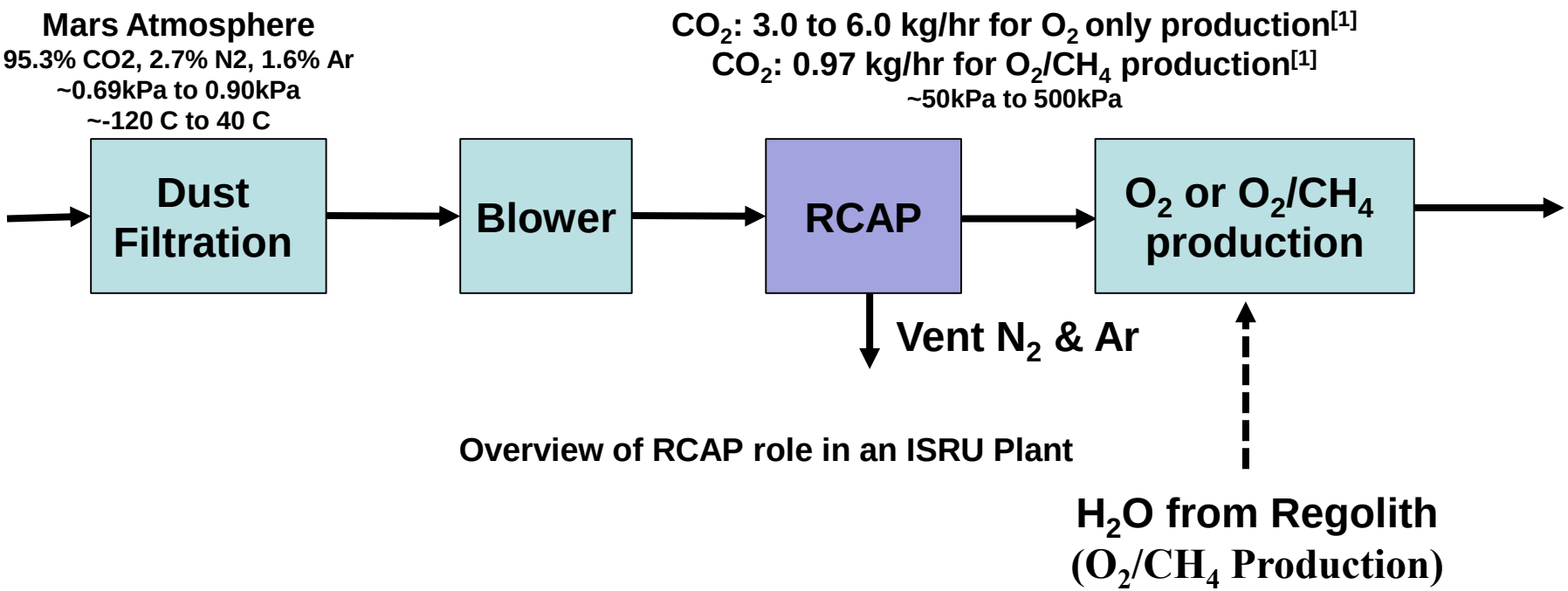

Overview of RCAP role in an ISRU Plant

Thermodynamic Model: Adsorption Pump

- RCAP fundamentals:
  - **Adsorption:** Cool to adhere CO_2 particles to a material called an adsorbent. More CO_2 adsorbed with *increasing pressure* and *colder temperatures*
  - **Desorption:** Heat the adsorbent to release the adhered particles.
  - Desorption in a closed volume will generate a pressurized product

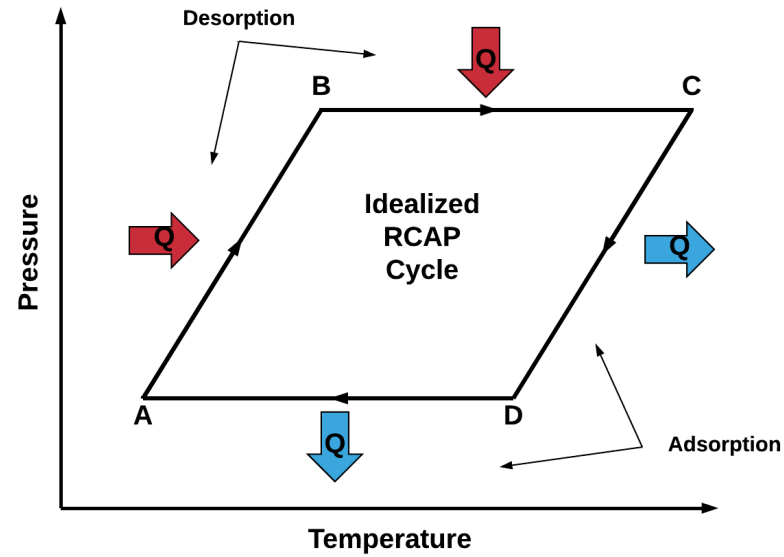

Idealized RCAP pump processes operated via temperature swing represented on a Pressure-Temperature diagram.[3]

- Idealized 4 step cyclic process:
  - $A \rightarrow B$: Constant Volume Heating of saturated bed (desorption)
  - $B \rightarrow C$: Constant Pressure Heating (desorption)
  - $C \rightarrow D$: Constant Volume Cooling
    - Cooling to restart cycle
  - $D \rightarrow A$: Constant Pressure Cooling
    - Adsorption Mars atmosphere

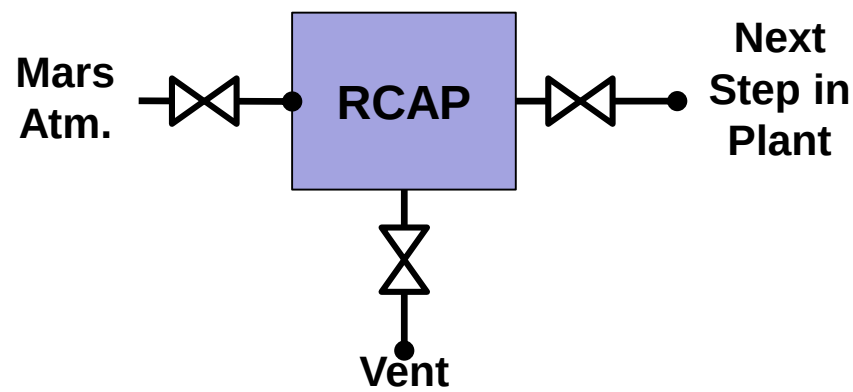

RCAP Flow Configuration

Modeling Approach – Adsorbent Properties

- The adsorbent is a porous material => Treat as a Finite Difference solid
  - Uniform bulk properties need to be determined for the thermal model – take into account the voids in the adsorbent:
    - k_{bulk}, bulk conductivity
    - ρ_{bulk}, bulk density
  - Follow approach in MSFC's Four Bed Molecular Sieve (4BMS-X) model to calculate[4]
    1. How the void fraction ($\varphi = \frac{total\ volume\ of\ voids\ in\ bed}{total\ bed\ volume}$) varies with geometry
    2. Conductance at bed/wall interfaces
  - Account for enclosing the adsorbent with walls
  - Assumed free CO_2 in the bed to be static (e.g. no convection, fills voids).

$$\varphi_{local} = \varphi_{\infty}\left[1 + C\exp\left(-N\ \frac{y}{d_p}\right)\right]$$

where:

$\varphi_{\infty} = far\ field\ bulk\ void\ fraction$
$y = distance\ from\ wall$
$d_p = pellet\ diameter$
$C = (1 - \varphi_{\infty})/\ \varphi_{\infty}$
$N = emperical\ constant \sim 5$[5]

Modeling Approach – Adsorbent Properties

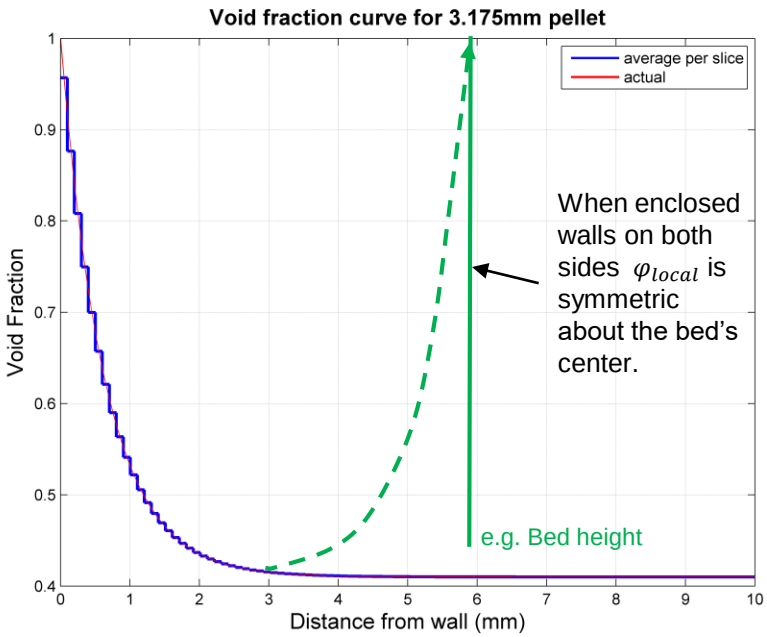

Bulk local void fraction vs. distance from a flat wall. Steps show average value at each 0.1mm slice.

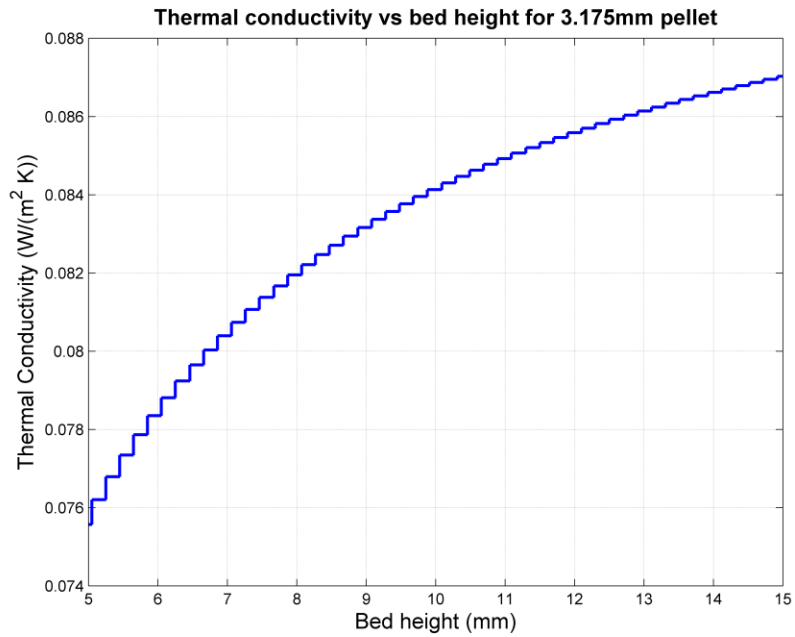

Bulk thermal conductivity vs bed height, used 0.1mm slices.

- Bulk porosity:
  - Bed is enclosed on both sides → bulk properties are for a specific height

$$\varphi_{bulk} = \frac{1}{y/2}\int_0^{y/2} \varphi_{local}\ dy$$

- Bulk Density:
  - $\rho_{bulk} = \varphi_{bulk}\,\rho_{CO_2} + (1-\varphi_{bulk})\rho_{sorbent}$

- Bulk Conductivity:
  - Use upper bound thermal conductivity, k, estimate – treats heat flow as parallel through sorbent and gas.[5]
  - $k_{bulk} = \varphi_{bulk}\,k_{CO_2} + (1-\varphi_{bulk})k_{sorbent}$
- Conductance at bed/wall interface:
  - Use conductance, G, across slice nearest the wall. [4]
    - $G_{bed\ to\ flat\ surface} = \frac{k_{bed\ 1st\ slice}}{L_{slice}}\left[\frac{W}{m^2K}\right]$

4BMX Model Used as Setup to TD

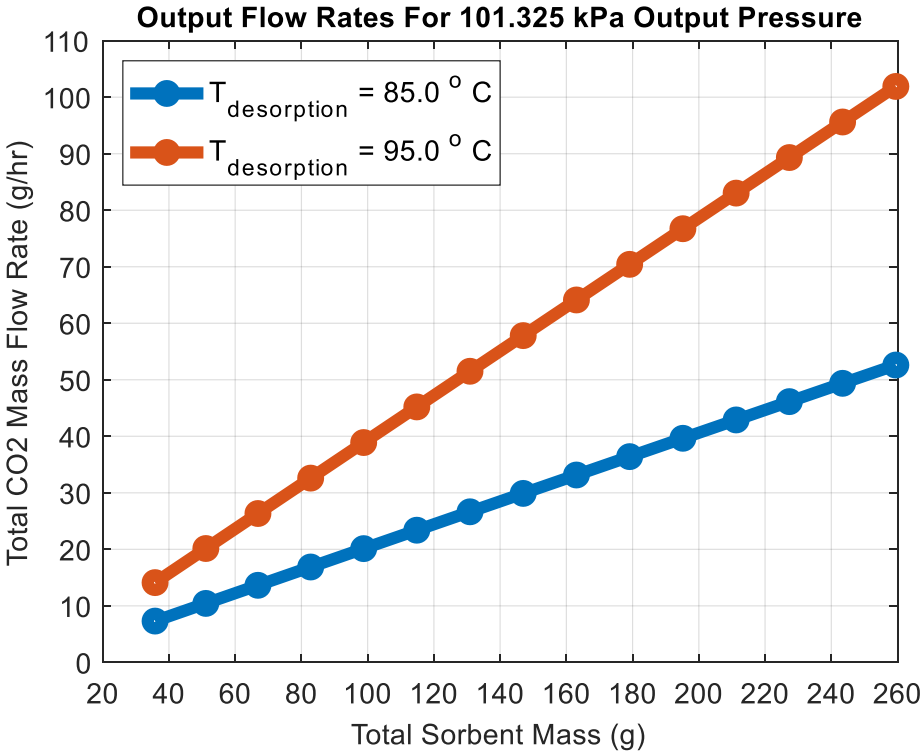

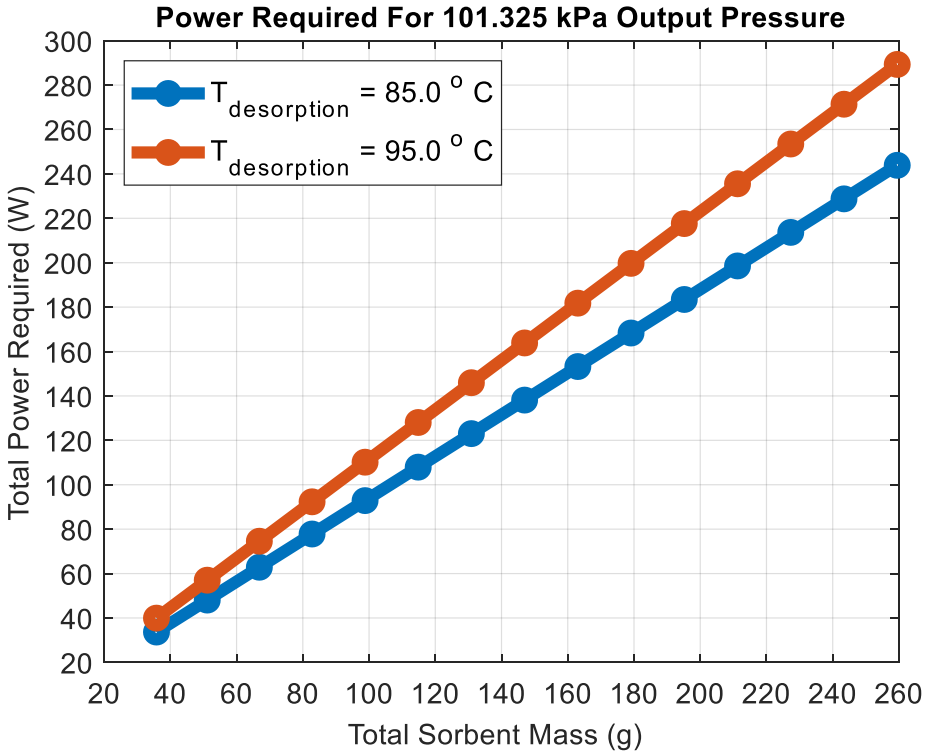

Single-Stage RCAP Test Analysis parameters:

- Adsorption Temperature = -20 ℃
- Inlet Pressure = $0.933\ kPa$
- Sorbent Heat Capacity **[Ref 1]:** $0.96\,\frac{kJ}{kg\ -K}$

4BMX Model Used to Setup to TD

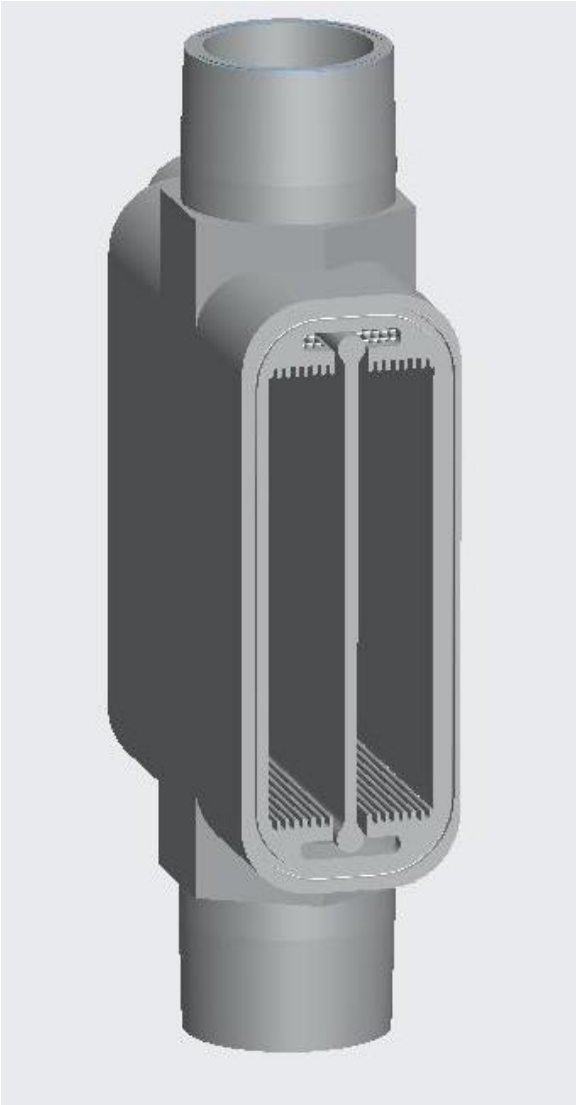

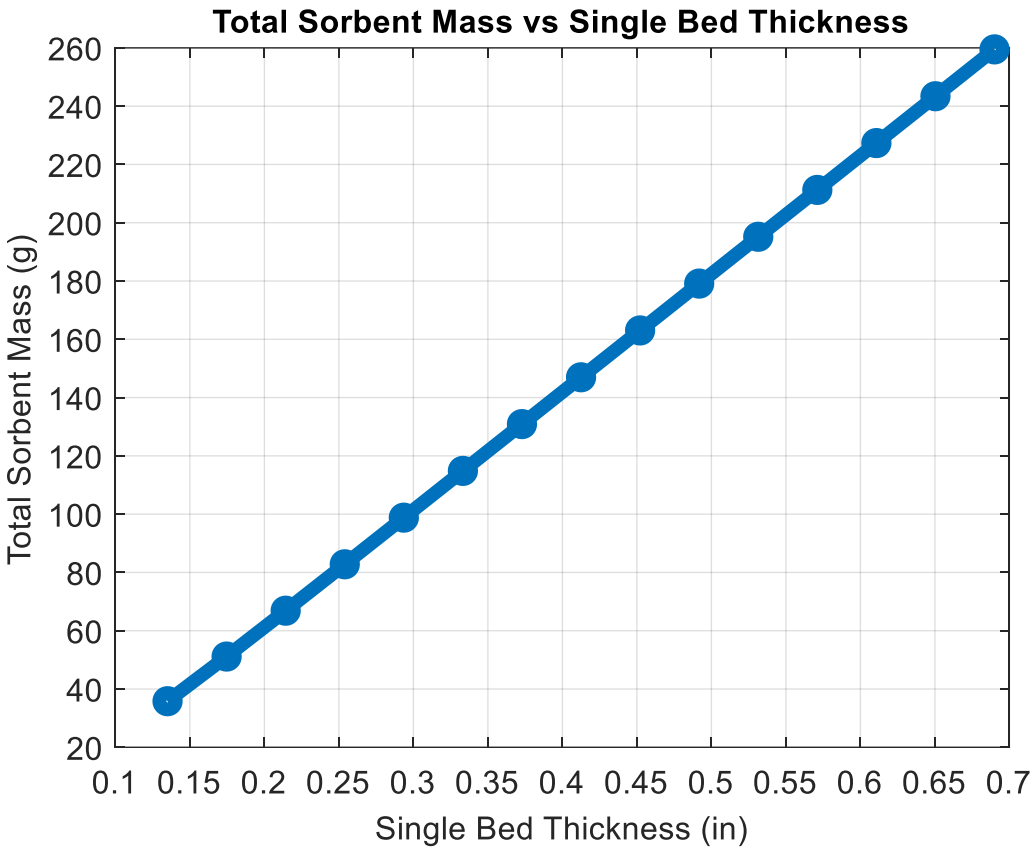

Single-Stage RCAP Test Hardware

RCAP Modeling – Plate Based Design

- Purpose
  - Given the heritage PNNL plate based design
  - Help size and choose a material for the NEW RCAP single-plate, single-stage test hardware (e.g. bed height).
- Overview:
  - 1 pump stage = 1 stack
    - 2 Cold plates
    - 2 Sorbent beds (Grace 544 13X)
    - 2 Metal screens
    - 1 Gas passage
  - Increasing the width of the <u>thermal model</u> is used to estimate <u>real world</u> configuration multiple-plates stacked.

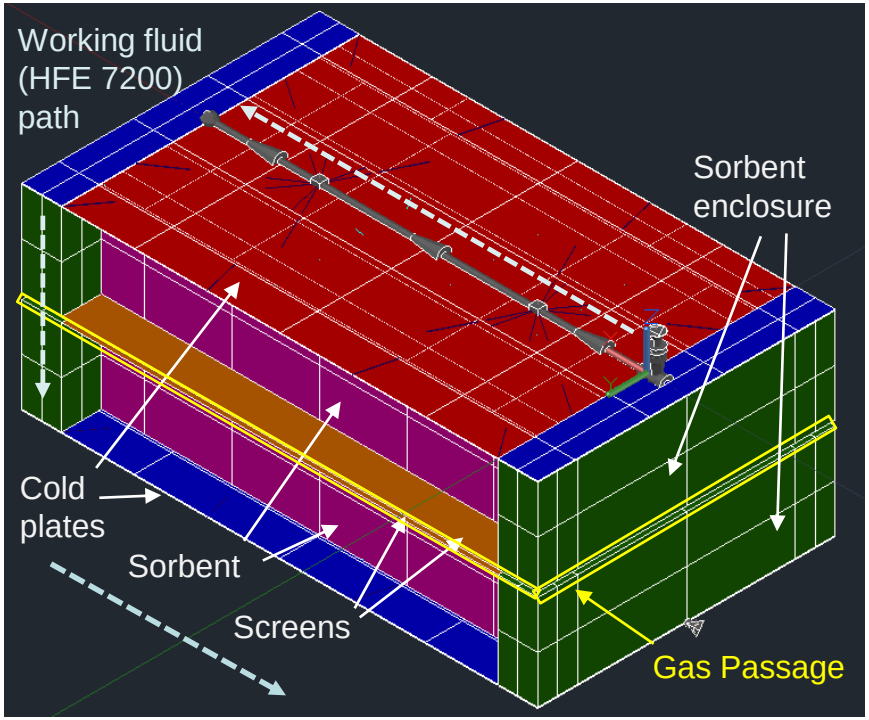

Thermal Desktop model layout. Finite difference objects represent solid parts. FloCAD objects (e.g. paths, junctions) represent the process gas to be pressurized and the working fluid.

TD Model 1 – Plate Based Design

- Implement Adsorption/Desorption Via Set Mass Flow Rates Of CO_2 To/From A Plenum (Infinite Source/Sink). At each time step set:
  - Plenum's Temperature = Sorbent's Mass Average Temperature
  - Plenum's Pressure = Gas Passage's Average Pressure
- Toth Isotherm fit predicts adsorption / desorption
  - Adsorption Bed Loading at Equilibrium (as a Function of Temperature and Pressure)
  - Isosteric Enthalpy of Adsorption (Derived from Bed Loading)
- Linear Driving Force (LDF) Approximation Models:
  - Function of Toth loading isotherm
  - Lumped Constant from Experimental Results (provided by MSFC, Knox, J)
    - Included convection and mass transfer rates through the bed, Adsorption Kinetics
  - Sorbent Heating/Cooling Rates (for heat of adsorption / desorption)

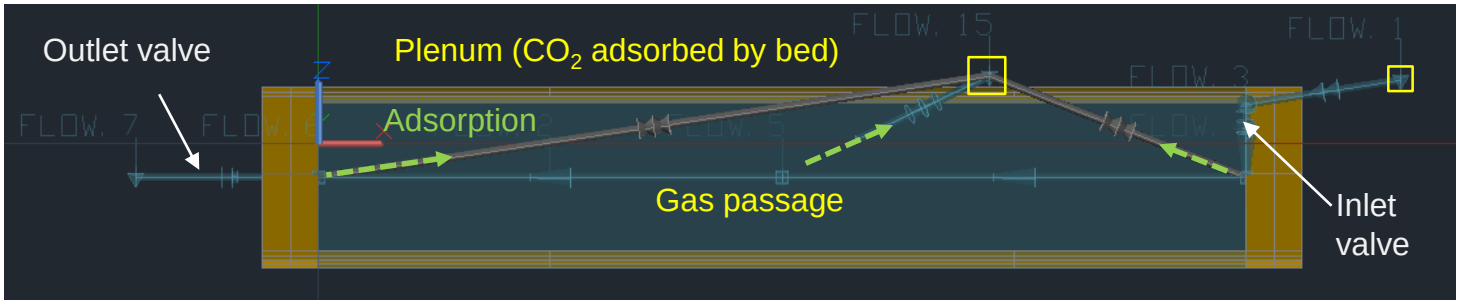

Gas passage. Set flows are used to implement 1) inlet flow rate from Mars atmosphere, and 2) flow rates from of CO2 adsorbing into or desorbing from the sorbent bed.

Plate Based Design – Materials Trade

- Comparison Case:
  - Cooled 1.72kg sorbent (ISRU Mission) from 100C in a sealed bed. (Thermal Effects Only)
  - GRCop-84 has a much higher thermal conductivity…
  - AlSi10mg version had a much lower thermal mass and cooled faster.
  - Use of AlSi10mg instead of GRCop-84 resulted in **$30,000 decrease** in 3D printing manufacturing costs

GRCop-84 results:

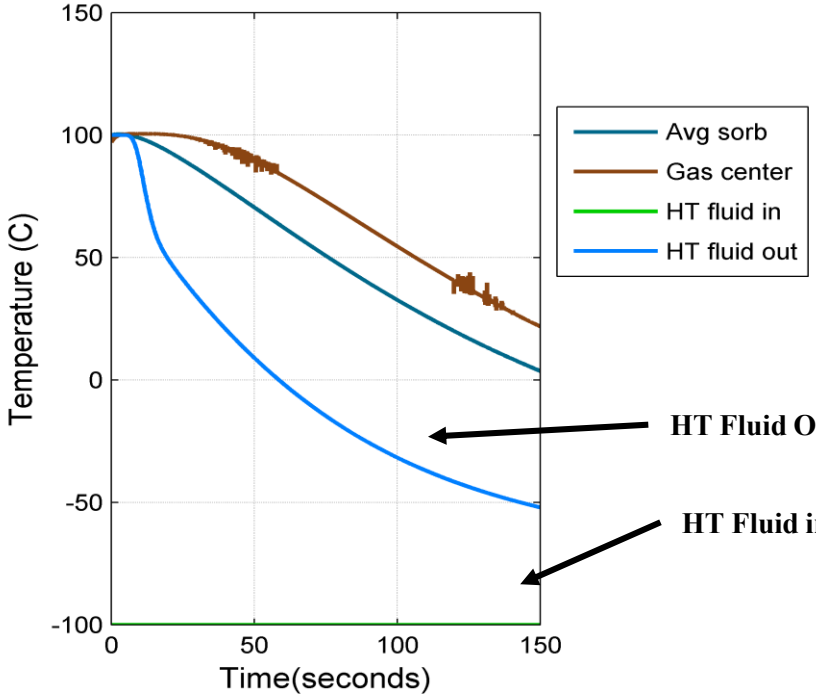

Cooling time with enclosure and cold plate set to GRCop-84. Cold plate wall could be 0.75mm thin.

AlSi10mg results:

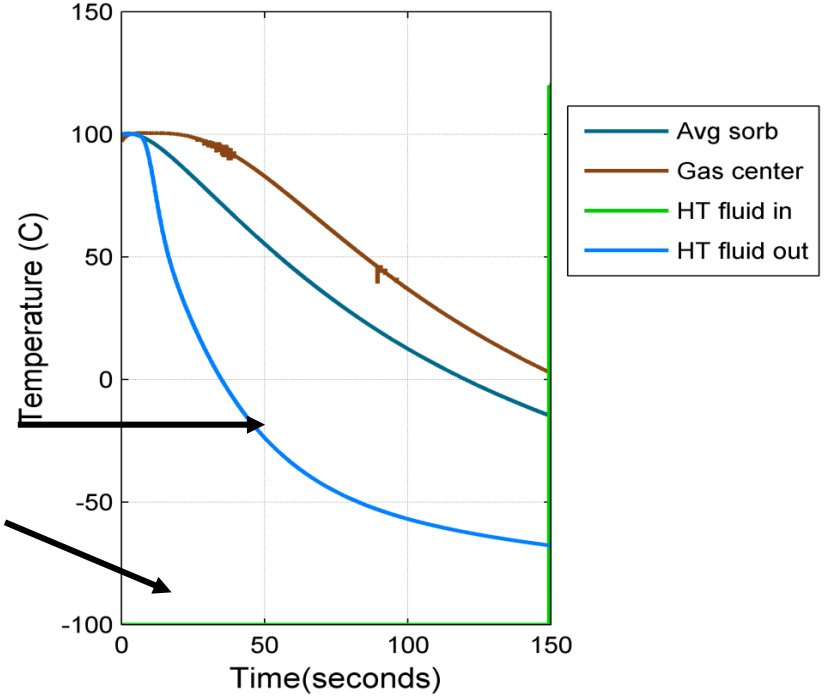

Cooling time with enclosure and cold plate set to AlSi10mg. Cold plate wall could be 0.55mm thin.

HT Fluid Out

HT Fluid in

Plate Based – Materials Trade

- Comparison Case:
  - Cooled 1.72kg sorbent from 100C in a sealed bed.
  - Observed large temperature gradients (~ΔT 110C) in the 5.23mm thick sorbent beds.

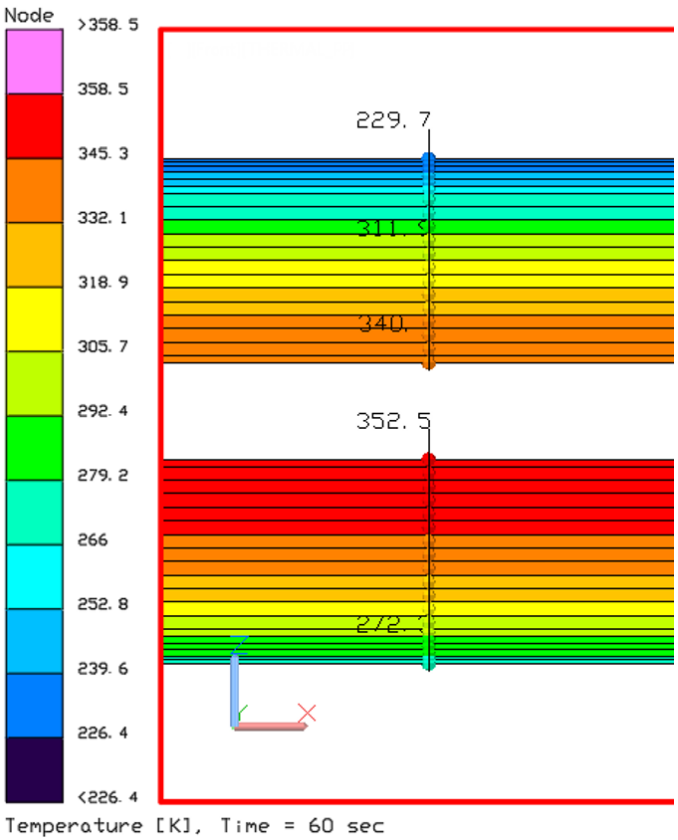

Temperature gradient in sorbent at 60s into cycle. At this point the gas passage center was at 74 C (347 K). The heat transfer fluid warmed from -100 C (173 K) to -34 C (239 K).

AlSi10mg results:

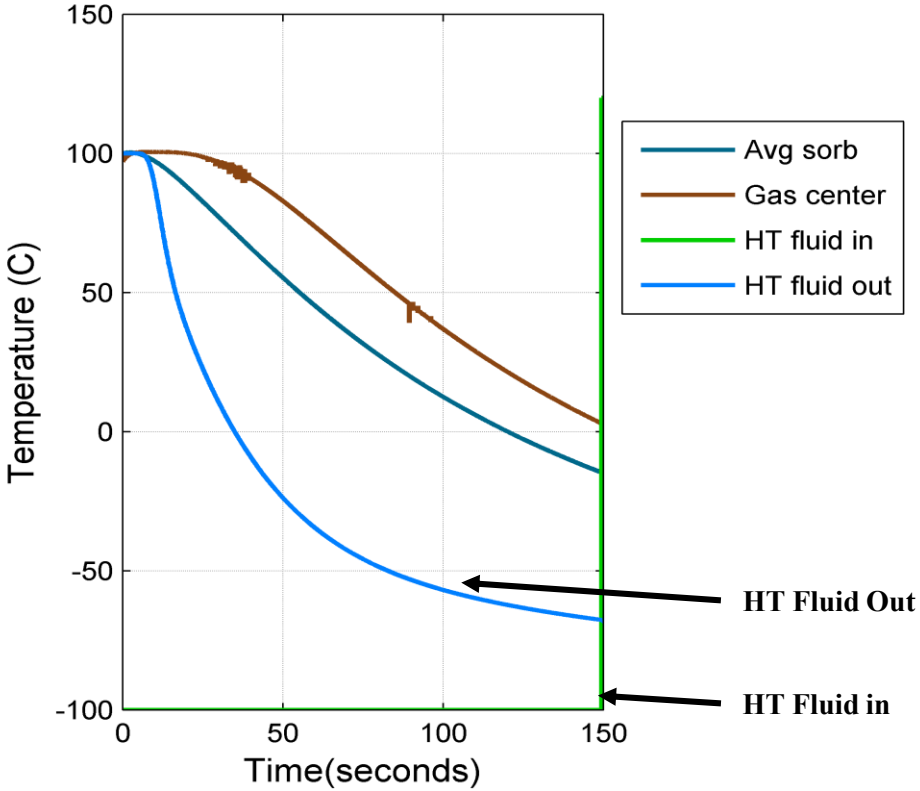

Cooling time with enclosure and cold plate set to AlSi10mg. Cold plate wall could be 0.55mm thin.

Plate Based – Current Results

- Case:
  - 1.72kg sorbent heated/cooled with forced liquid HFE 7200 at 0.063kg/s
    - 1st stage of a 5.16kg pump.[3]
    - HFE 7200 mass flow rate approximately scale from on Linne (2013) experiment.[6]

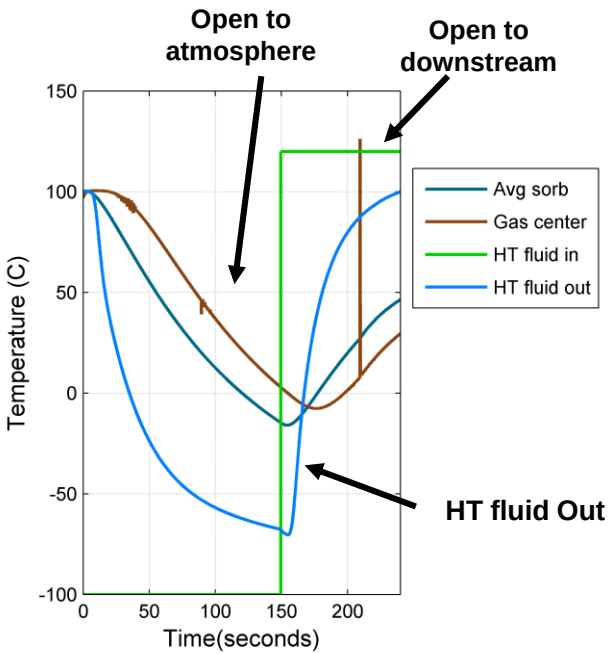

Temperatures throughout one RCAP cycle

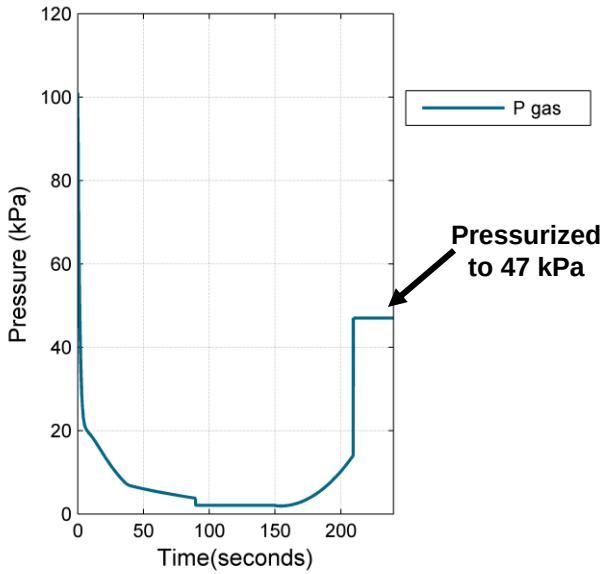

Average gas passage pressure throughout one RCAP cycle

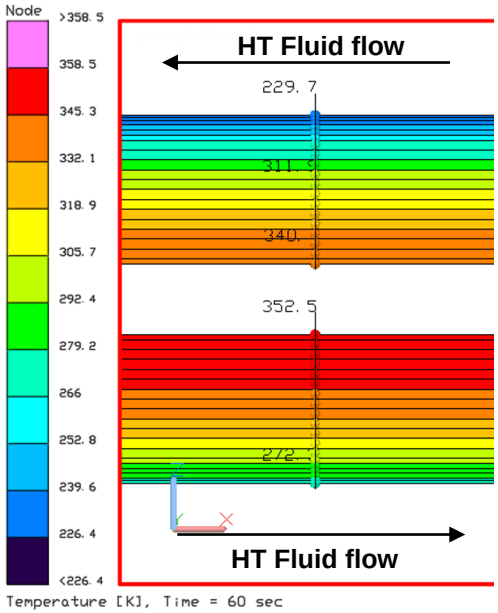

Temperature gradient in sorbent at 60 s into cycle. At this point the gas passage center was at 74 C (347 K). The heat transfer fluid warmed from -100 C (173 K) to -34C (239 K).

Single-Plate, Single-Stage Test

- Purpose
  - Single-Plate, Single-Stage RCAP test article – scaled down RCAP.
    - Targeting 1/10th CO_2 production for full scale ISRU system. (O2/CH4 Production)
    - Will be compared against testing results (Pressurization, Bed Temperature)

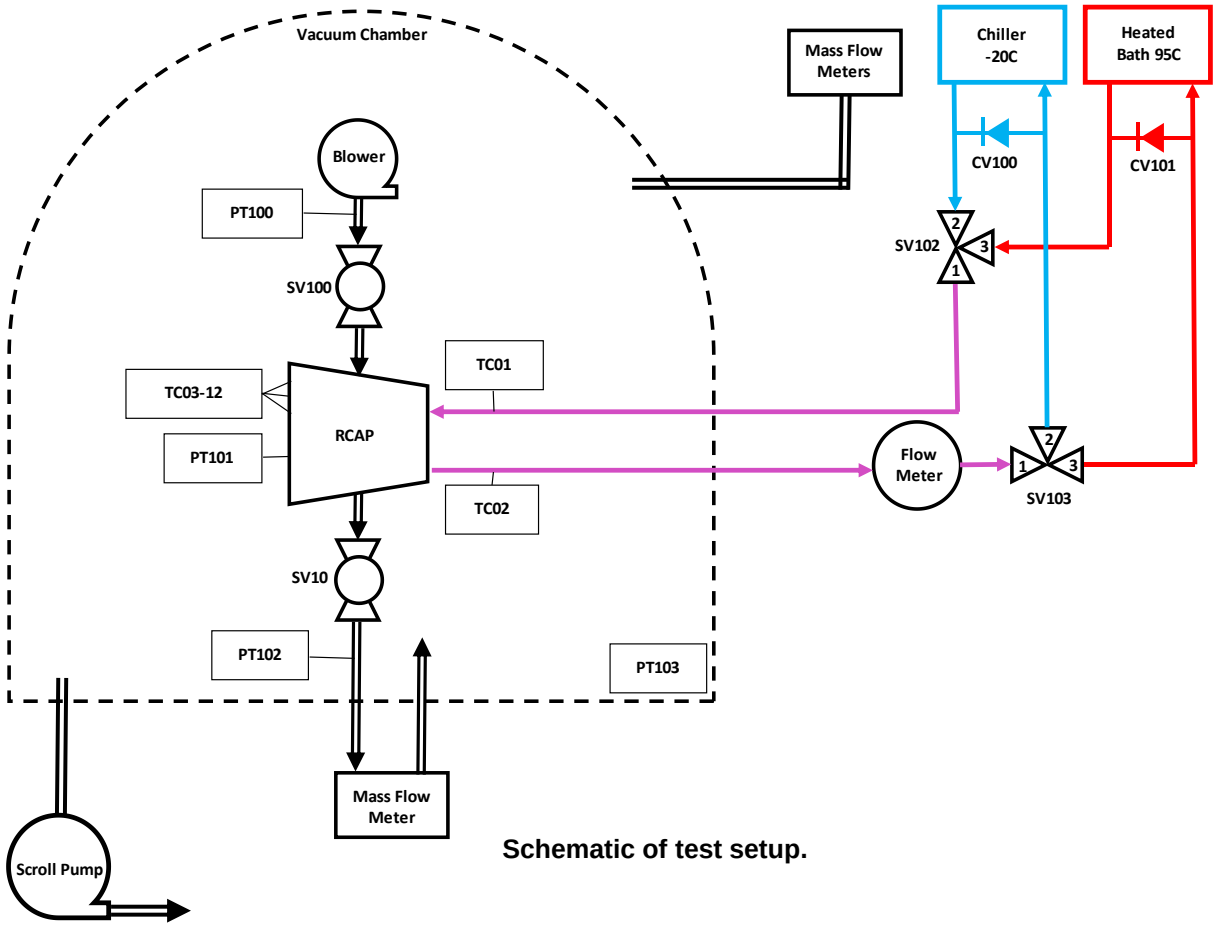

Schematic of test setup.

Single-Plate, Single-Stage RCAP

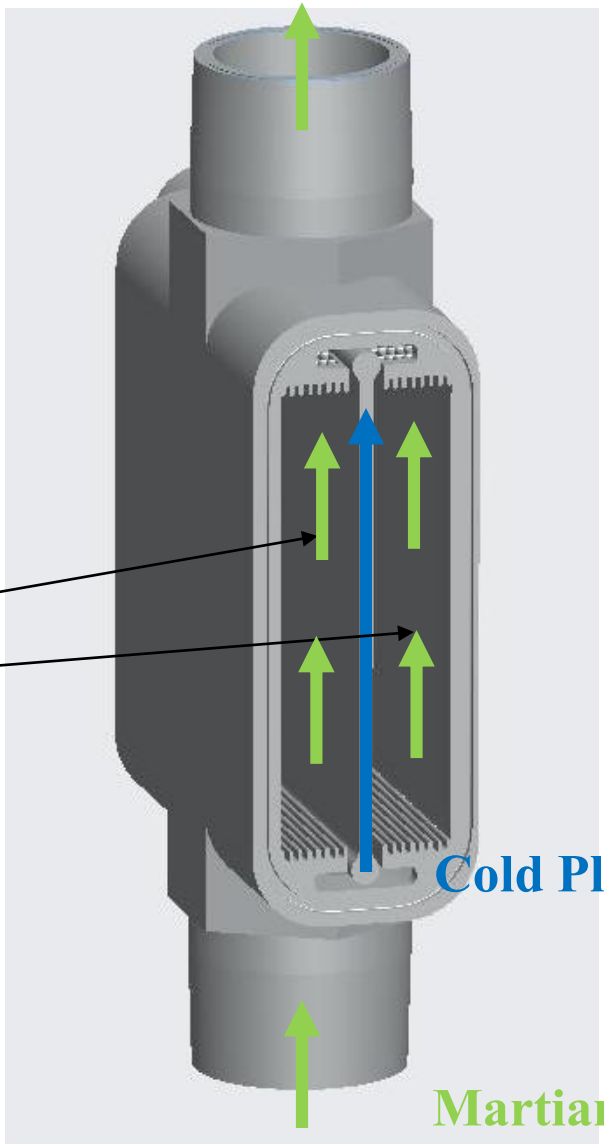

Single-Plate, Single-Stage Test Layout

RCAP in the Mars Air Chamber Simulator

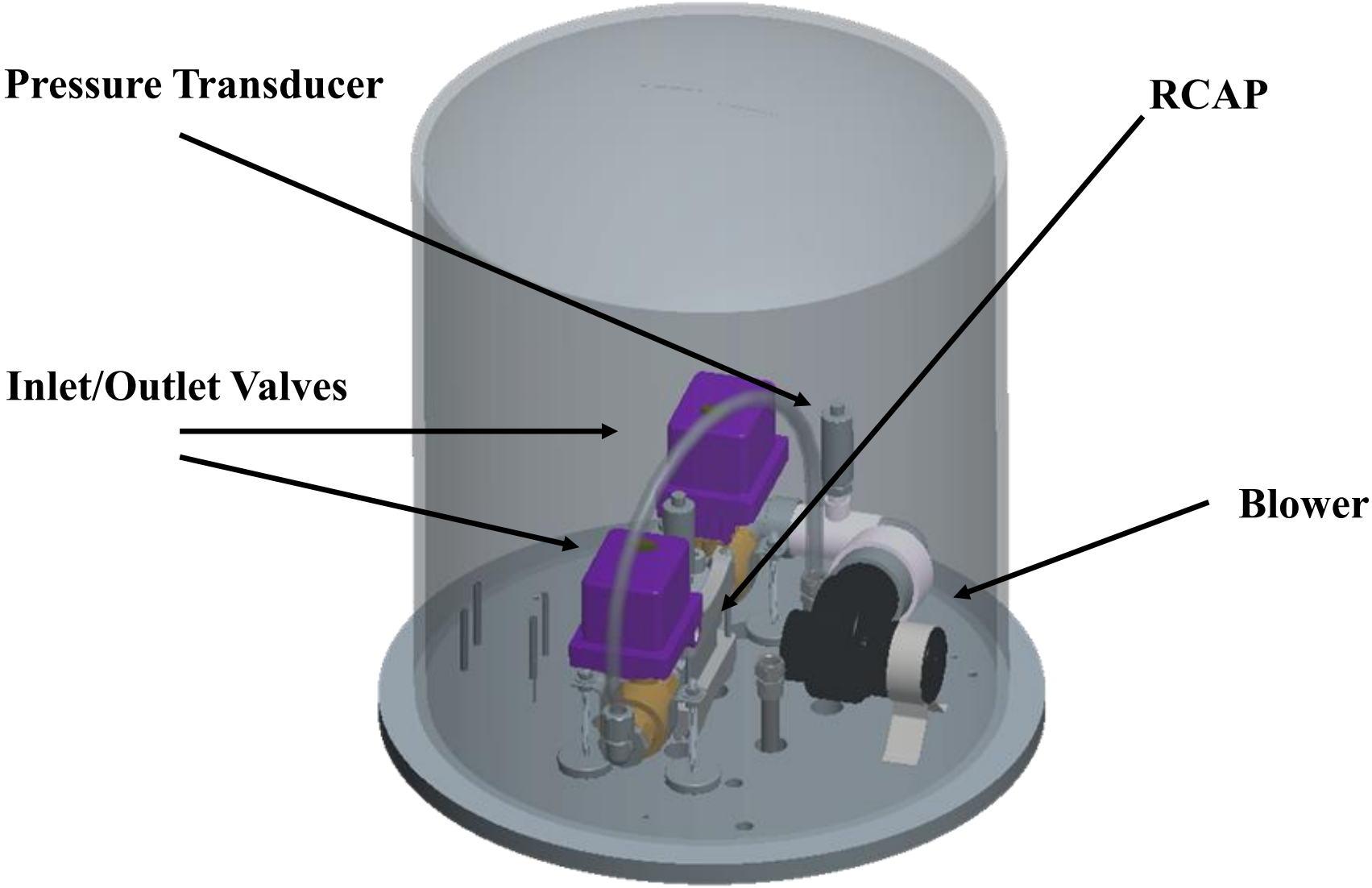

TD Model 2 Single-Plate, Single-Stage Test

- Changes from Plate Based Design:
  - Updated geometry, increased divisions along gas flow path, added loss dues to wire mesh, update heating/cooling loop to reflect test setup.

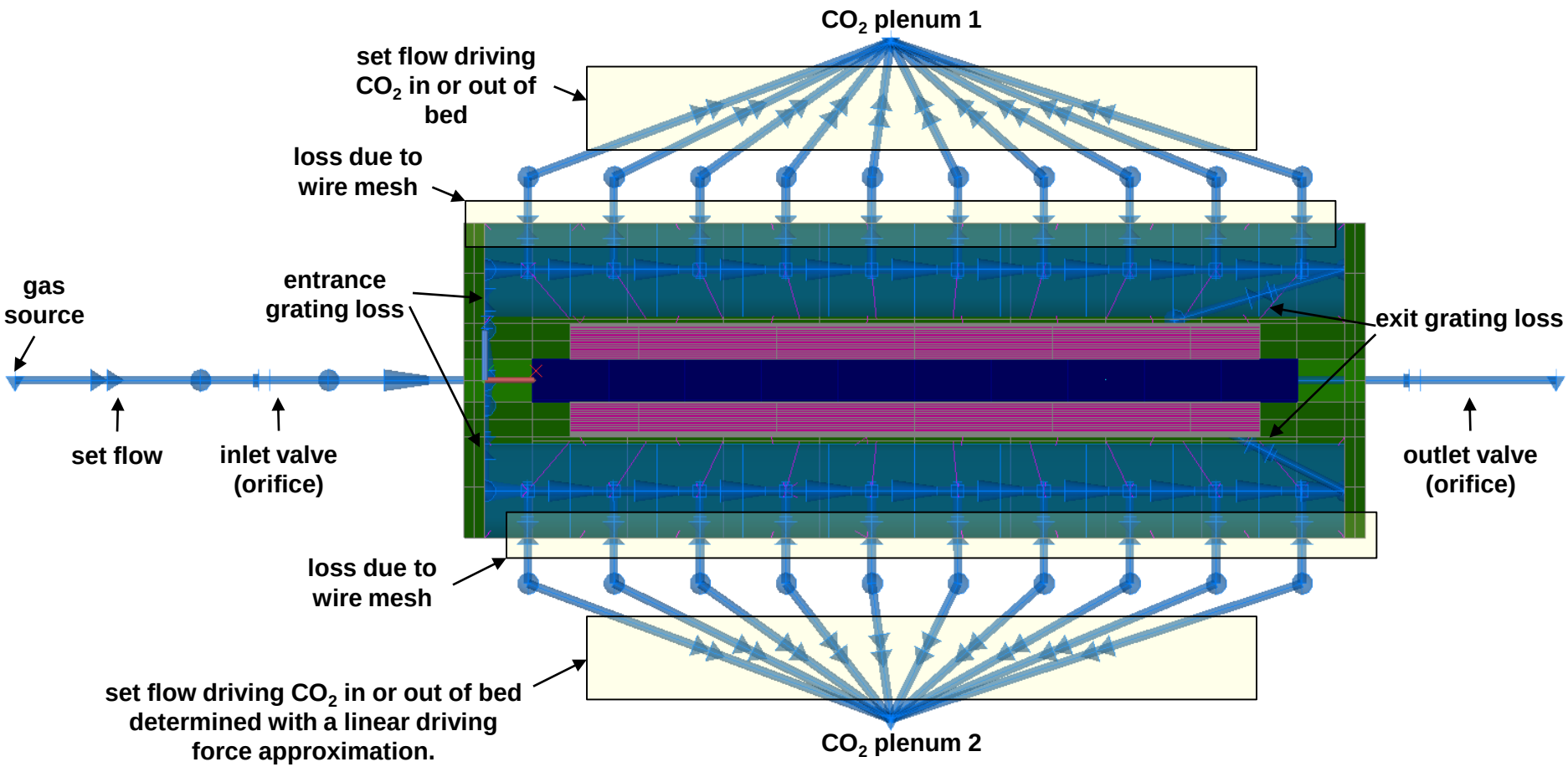

Single-Plate, Single Stage Current Status

- Average Bed Temperature Takes Hours To Reach The -20 C Average Bed Temperature
  - The insulating properties of Zeolite 13X make are not making it easy to transfer heat (via conduction) to layers more than ~2 mm from the cold plate
  - Cold plate mini-channel heat transfer performance is good, close layers respond within ~5 minutes.
  - Conduction through the porous media is the problem.
- Pressurization is dramatically lower (8kPa) versus Plate Based results (40KPa)
  - The Model is Sensitive to Voids Outside the Porous Media Bed.
  - While plastic fillers can be used in the actual testing model, we need to check the total model volume with respect to the adsorbent loading.

Thermal Conductivity Improvement

Comparison of Porous Bed Thermal Conductivity

Zeolite only (left) Compared against

50 % Aluminum Shot, 50 % Zeolite 13 X Adsorbent (By Volume)

~750X Improvement in Thermal Conductivity

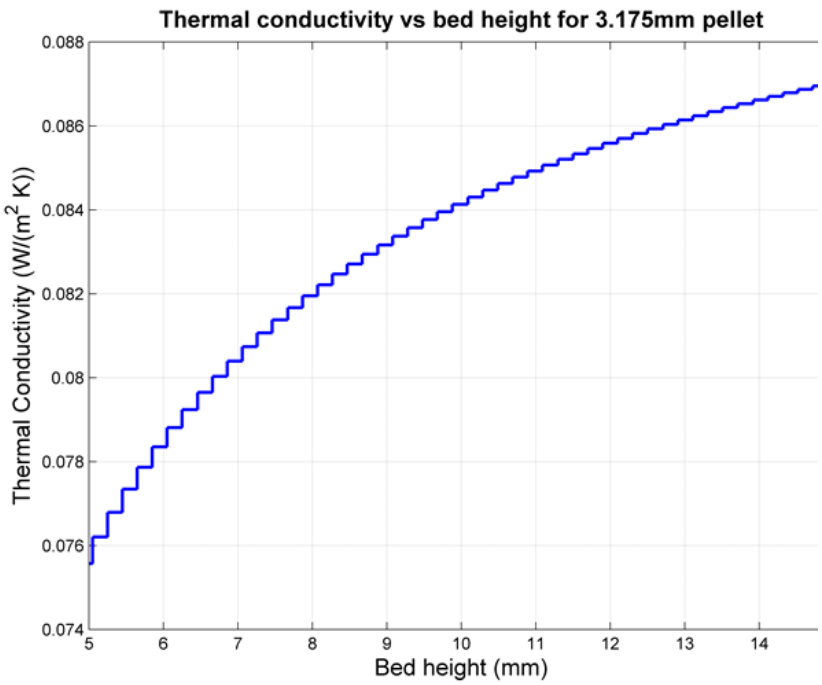

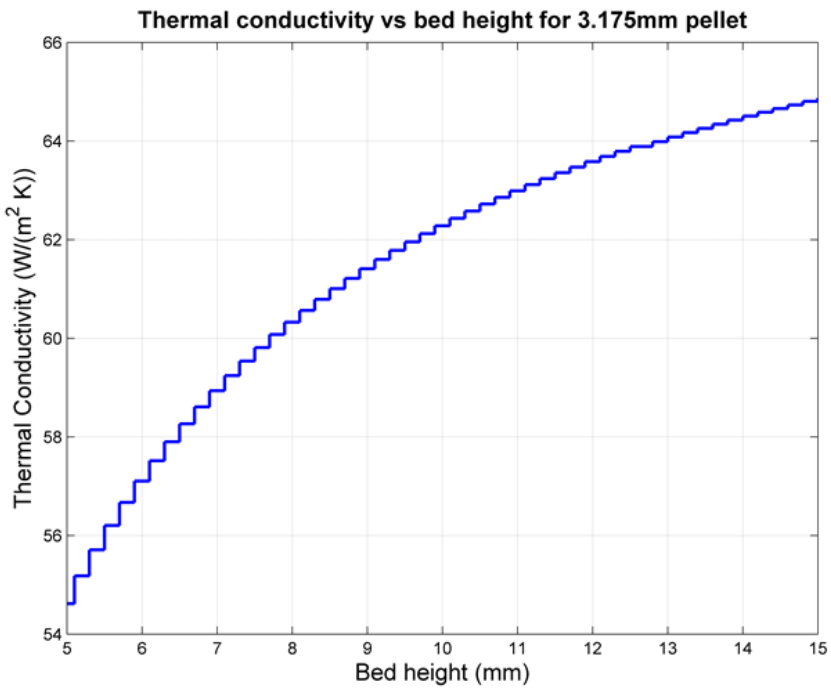

Single-Plate, Single Stage Current Status

- Low Density Of The Martian Atmosphere Is Causing Compressibility Problems Within Thermal Desktop.
  - Mars Atmospheric Pressure is ~1/100 Of STP Conditions
  - Valves Opening And Closing Specifically Cause Numerical Problems
    - In Progress Of Adding Rates To Opening And Closing Of RCAP Inlet And Outlet Valves (Rather than bang bang)
    - Is There A Way To Add Dampening Similar To CFD Simple Adsorption Layer Boundary Conditions?
      - Based On Sponge Effect (Layers of Source Terms Originally Derived from Porous Media CFD)
      - Not Method Of Characteristics

Closing Remarks

- Thermal Desktop model for Plate-Based design (PNNL Heritage) performed more or less as expected.
- The Single-Plate, Single-Stage Thermal Desktop model did not achieve expected pressurization
- Adding Aluminum shot to the porous media bed appears to be a good idea.
- We may need a larger Hot / Cold Heat Transfer Fluid temperature swing for the RCAP
  - Model in current state can help us answer this question.
- Single-Plate, Single Stage experiment was specifically designed to measure the porous media bed Temperature
  - Results will be used to adjust constants in the 4BMX model.

References

1. National Aeronautics and Space Administration, “NextSTEP-2 BAA Appendix D: In Situ Resource Utilization (ISRU) Technology - NNH16ZCQ001K-ISRU,” *FedBizOpps*. FedBizOpps. [Accessed: 30-Jul-2018]. https://www.fbo.gov/index?s=opportunity&mode=form&tab=core&id=34eb0ba219ff3a8d97c9c4b2c9302bf1
2. R. T. Yang, Gas Separation by Adsorption Processes. Kent: Elsevier Science, 01.
3. Hasseeb, Hashmatullah and Iannetti, Anthony, “A System Level Mass and Energy Calculation for a Temperature Swing Adsorption Pump used for In-Situ Resource Utilization (ISRU) on Mars,” presented at the TFAWS, 2017.
4. R. Schunk, W. Peters, and J. Thomas, “Four Bed Molecular Sieve – Exploration (4BMS-X) Virtual Heater Design and Optimization,” Jul. 2017.
5. D. Nield and A. Bejan, *Convection in Porous Media*. New York, NY: Springer New York, 2006.
6. D. Linne *et al.*, “Demonstration of Critical Systems for Propellant Production on Mars for Science and Exploration Missions,” 2013.

Backup

Adsorption Pump Concept

- 4 step cyclic process:

D → A: Isobaric Adsorption

- Start with cooled sorbent bed.
- Upstream valves open.
- Blower directs flow through the bed. Non-CO_2 gasses vent.
- Adsorption occurs (CO_2 molecules bond to sorbent, e.g. zeolite) releasing heat.[2]
- Sorbent bed is externally cooled to the maintain a constant pressure.
- State A's temperature is called the adsorption temperature.

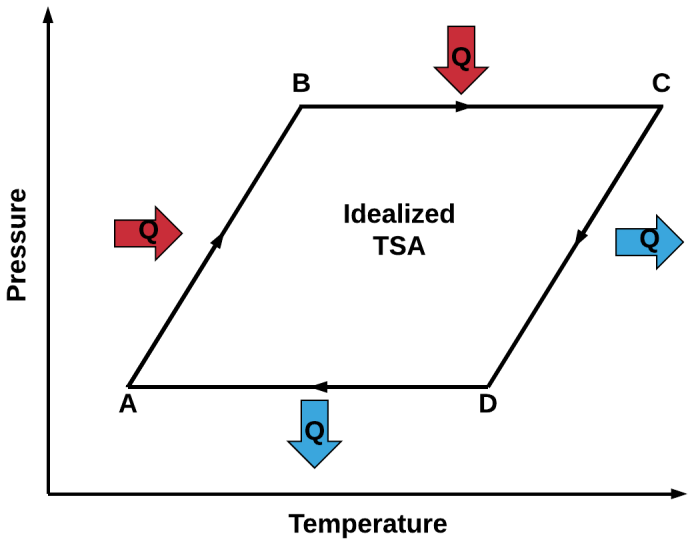

Idealized TSA pump processes represented on a Pressure-Temperature diagram.[3]

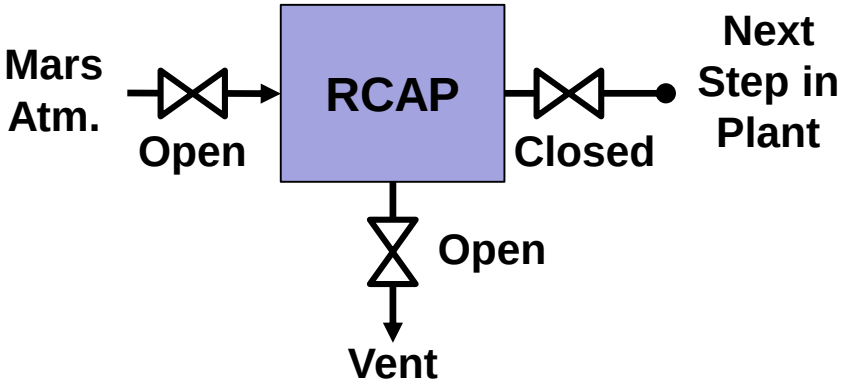

RCAP flow configuration during D to A transition.

Adsorption Pump Concept

- 4 step cyclic process:

A → B: Const. Volume Compression

- Start at adsorption temperature.
- All system valves close.
- Sorbent bed is externally heated until the target pressure is reached.
- Desorption occurs:
  - "Pulls" heat from the system
  - And pressurizing the bed's enclosure.

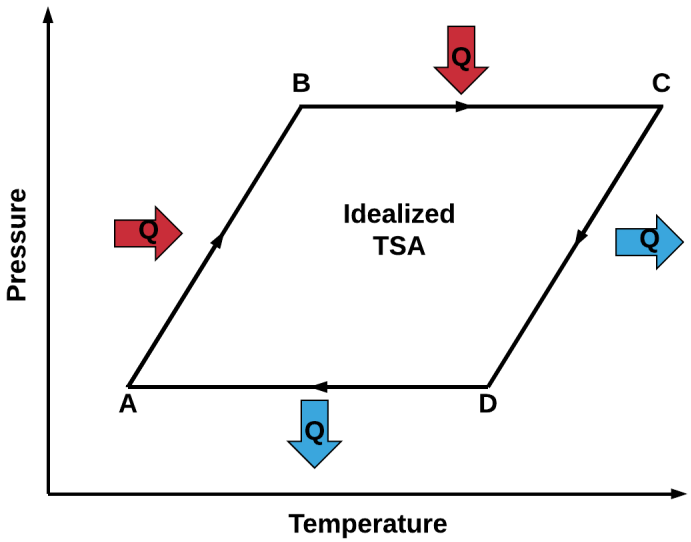

Idealized TSA pump processes represented on a Pressure-Temperature diagram.[3]

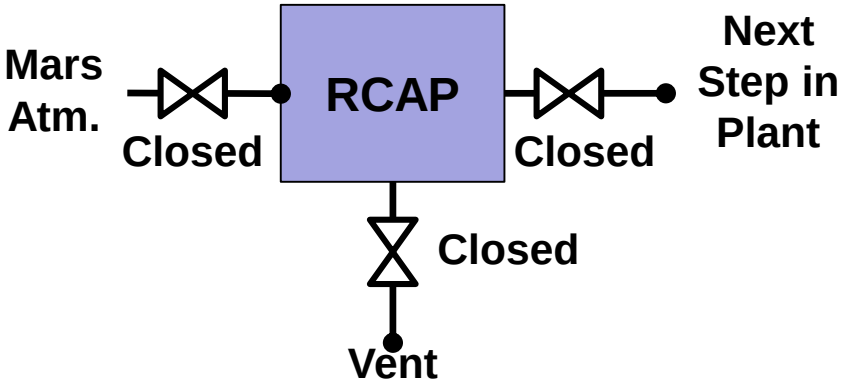

RCAP flow configuration during A to B transition.

Adsorption Pump Concept

- 4 step cyclic process:

B → C: Isobaric Desorption

- Downstream vales are opened to allow pressurized CO_2 to exit the bed.
- Desorption continues.
- Bed is heated to maintain constant pressure.
  - Desorption is endothermic.
  - Hotter beds hold less gas.
- State C's temperature is called the desorption temperature.

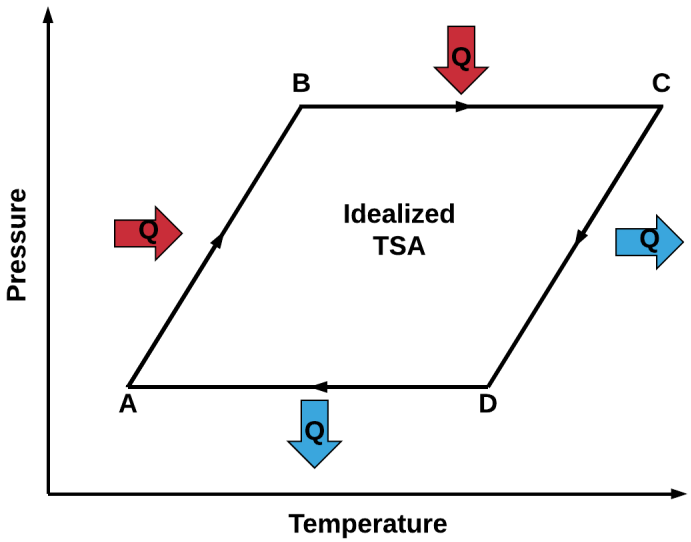

Idealized TSA pump processes represented on a Pressure-Temperature diagram.[3]

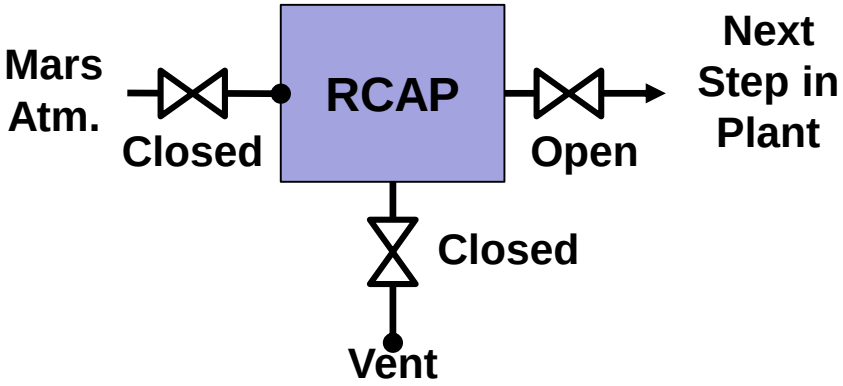

RCAP flow configuration during B to C transition.

Adsorption Pump Concept

- 4 step cyclic process:

C → D: Const. Volume Cooling

- Start at target desorption temperature.
- Starts at max desorption temperature, and max bed pressure.
- System valves are closed.
- Bed is cooled in preparation for state D.
- Remaining free CO_2 in the enclosure will start to adsorb, decreasing pressure in the enclosure.

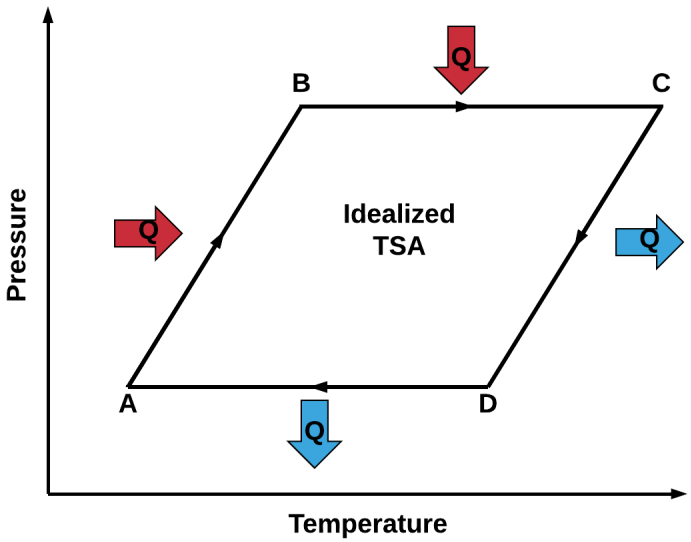

Idealized TSA pump processes represented on a Pressure-Temperature diagram.[3]

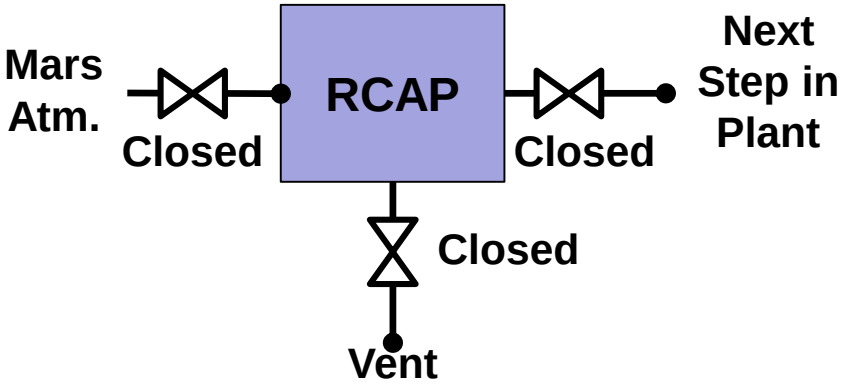

RCAP flow configuration during C to D transition.

To optimize required power & sorbent mass this cyclic process will be split into multiple stages.[3]

Model Approach - Sorbent

- Bed properties with Al shot
  - Bed is enclosed on both sides → bulk properties are for a specific height
  - Use upper bound thermal conductivity, k, estimate – treats heat flow as parallel through sorbent and gas.[5]
    - $k_{bed} = 0.5k_{al\ shot} + (1-0.5)k_{sorbent}$
    - $k_{slice} = \varphi_{slice}\, k_{CO_2} + (1-\varphi_{slice})k_{bed}$
    - $k_{bulk} = \frac{\sum_{i=0}^{i=n_{slices}/2} k_{slice}}{\left(\frac{n_{slices}}{2}\right)}$
  - Density (volume averaged):
    - $\rho_{bed} = 0.5\rho_{al\ shot} + (1-0.5)\rho_{sorbent}$
    - $\rho_{slice} = \varphi_{slice}\rho_{CO_2} + (1-\varphi_{slice})\rho_{bed}$
    - $\rho_{bulk} = \frac{\sum_{i=0}^{i=n_{slices}/2} \rho_{slice}}{\left(\frac{n_{slices}}{2}\right)}$

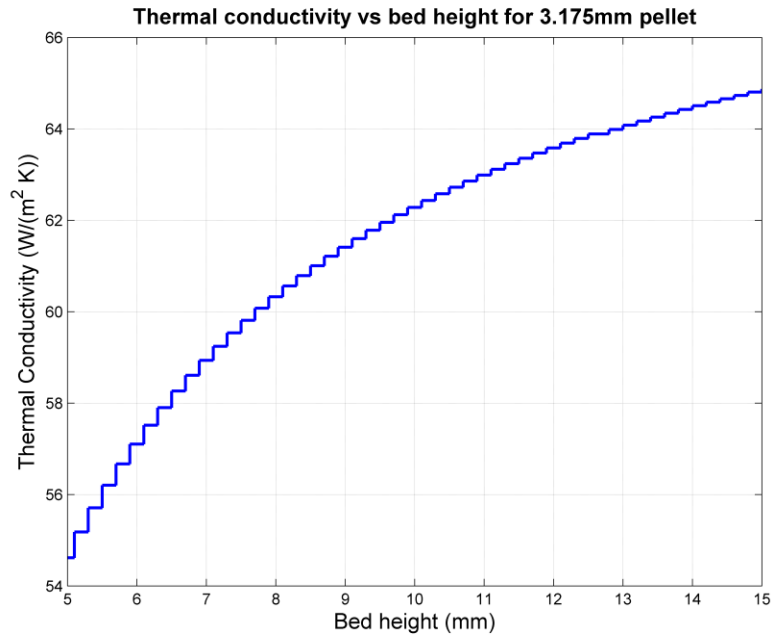

Bulk thermal conductivity vs bed height, used 0.1mm slices. The bed has 50% aluminum shot and 50% sorbent.

$$mass_{sorbent} = 0.5 * \frac{m_{bed}}{\rho_{bed}}\rho_{sorbent}$$

- Conductance at bed/wall interface
  - Use conductance, G, across slice nearest the wall. [4]
    - $G_{bed\ to\ flat\ surface} = \frac{1}{\frac{1}{\frac{k_{bed\ 1st\ slice}}{L_{slice}}} + \frac{1}{1000}} \left[\frac{W}{m^2 K}\right]$

Dampen contact conductance with ~ Al to Al contact in vacuum. Values is ~990W/(m²K)

HT Fluid "Loop"

To account for chiller's cooling capacity or heater's heating capacity (fake a loop):

1) Calculate chiller and heater reservoir temperatures using max heating or cooling capacities.

2) Set inlet plenums to calculated reservoir temperature unless the chiller or heater's set point is exceeded. If a set point is surpassed, use the set point as the plenum's temperature.

$$\frac{dU}{dt} = Q + \sum m_{in} h_{in} - \sum m_{in} h_{in}$$

$$mc_{p,res} \frac{dT}{dt} = Q + \dot{m} c_{p,avg} (T_{in} - T_{out})$$

$$mc_{p,res} \frac{\Delta T}{\Delta t} = Q + \dot{m} c_{p,avg} (T_{in,t-1} - T_{out,t-1})$$

$$\Delta T = \left(\frac{Q + \dot{m} c_{p,avg} (T_{in,t-1} - T_{out,t-1})}{mc_{p,res}} \right) \Delta t$$

$$T_{res} = T_{res,t-1} + \Delta T$$

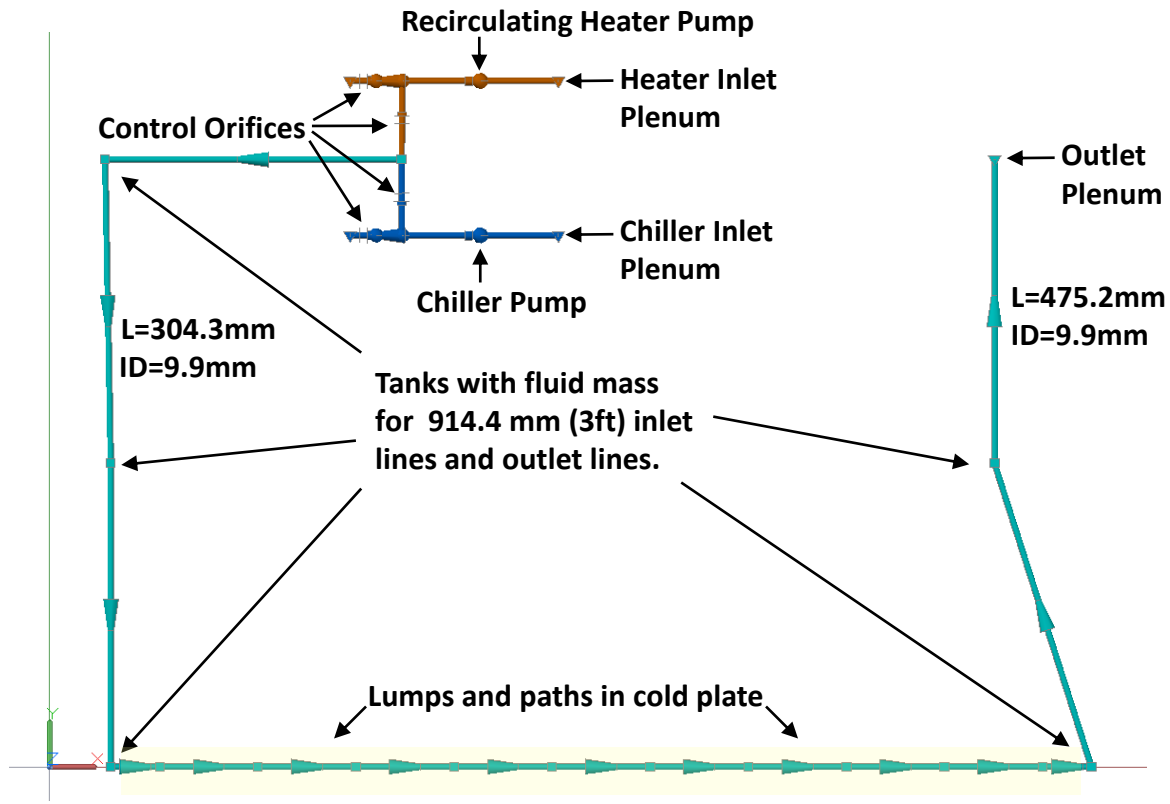
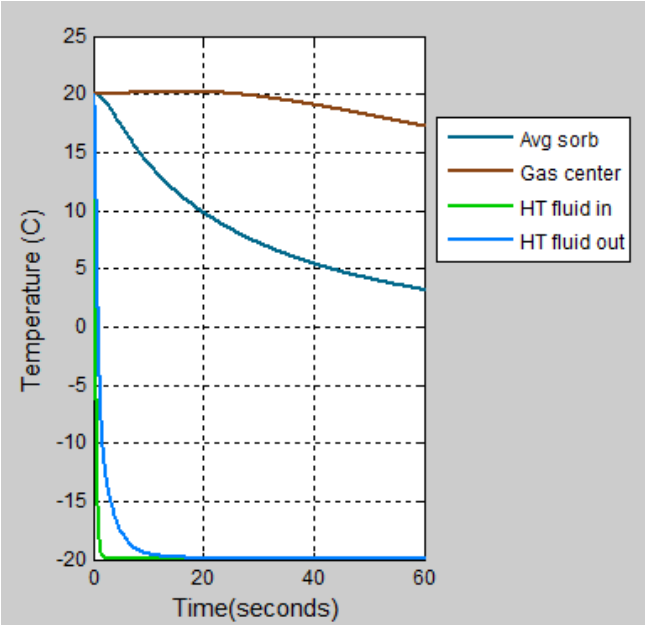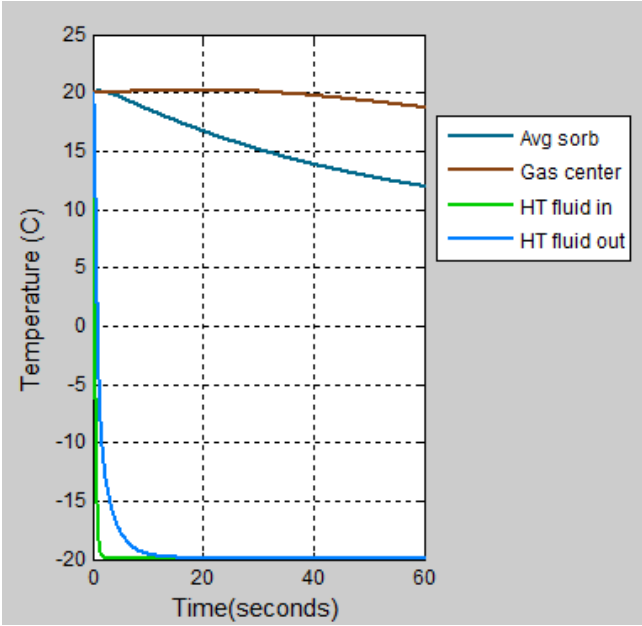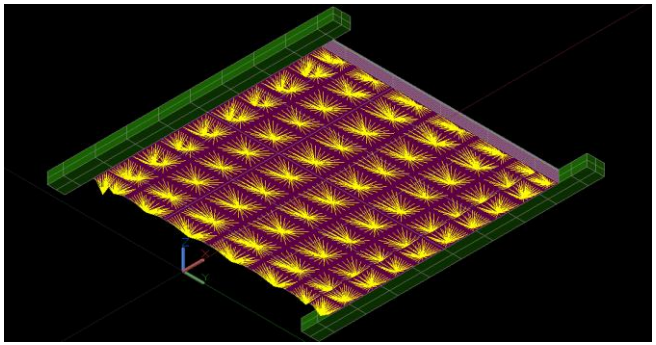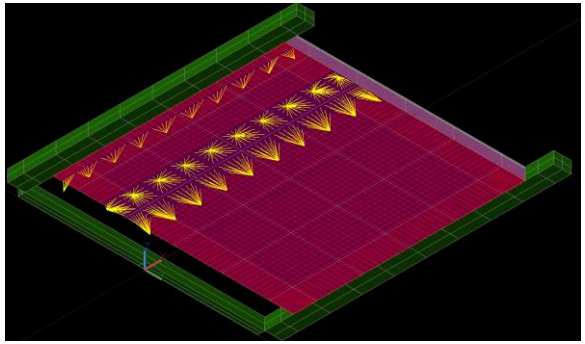
Why you check conductances