TFAWS Passive Thermal Paper Session

INFLUENCE OF LUNAR ROVER ON LUNAR SURFACE TEMPERATURE
TFAWS18-PT-01

Christopher J. Pye, Jean-Frédéric Ruel
Maya HTT Ltd.

Josh Newman
Canadensys Aerospace Corp.

Presented By

Jean-Frédéric Ruel

Thermal & Fluids Analysis Workshop
TFAWS 2018
August 20-24, 2018
NASA Johnson Space Center
Houston, TX

Abstract

- Abstract
  - Lunar regolith is a very poor thermal conductor
  - Quick surface temperature variations due to environment change
  - Fixed surface temperature used for earth may not be valid for the lunar surface
  - Presence of the rover itself affect surface temperatures

  - A Simcenter Space Systems Thermal model was created to investigate the influence of a simplified lunar rover model on the surface temperature and the impact of these changes on rover thermal performance.

Introduction

- Introduction
  - Maya HTT Ltd. And Canadensys Aerospace Corp. have collaborated on a number of projects related to lunar rover thermal design and analysis
  - Initially lunar surface was assumed at constant temperature
  - Later projects included a detailed thermal model of the lunar surface based on the work presented by Christie et al[1]

www.mayahtt.com

Lunar Surface Mathematical Model

- Lunar Surface model
  - Christie et al[1] compared this model against lunar data.
  - We compared the model generated in Simcenter Space Systems Thermal to Christie et al's results

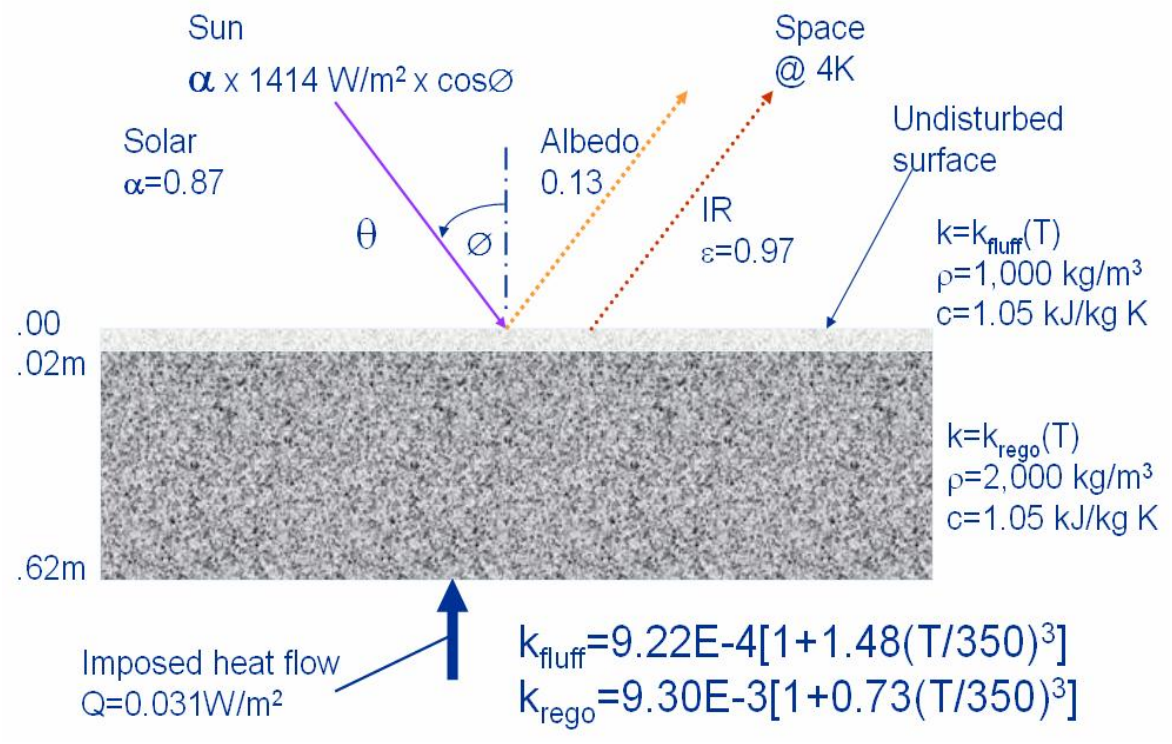

Lunar surface representation and properties (from 1).

Rover Mathematical Model

- Lunar Rover model used:
  - 150mm × 300mm × 500mm box
  - 200mm wheel diameter
  - All six side modelled as Radiators
  - Each surfaced fixed at 35ºC
  - White paint optical properties:
    - a= 0.23, e=0.88

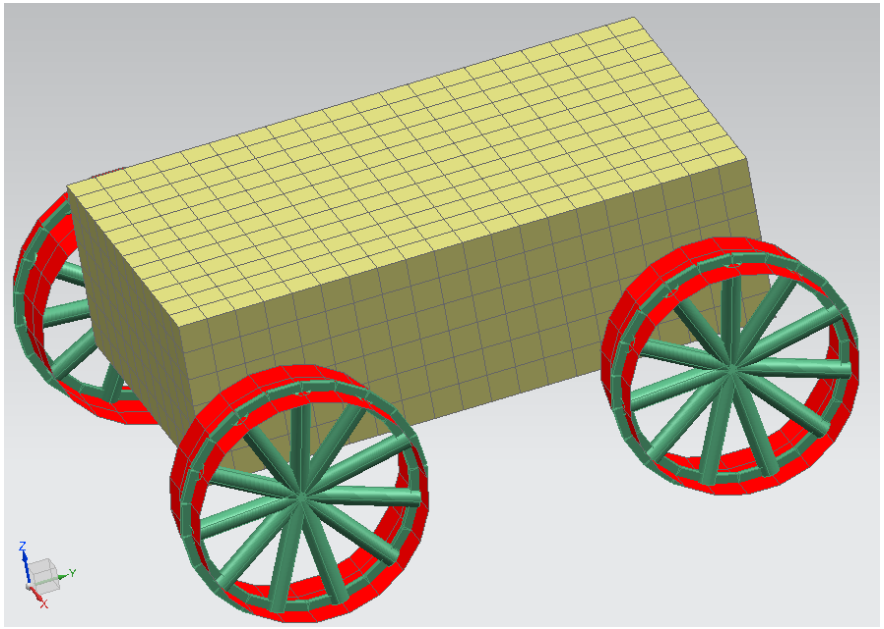

Thermal model of simple rover.

Stationary Rover

- Steady State Runs
  - Constant surface temperature
  - Calculated surface temperature

Rover and lunar surface temperature, midday, latitude 75º

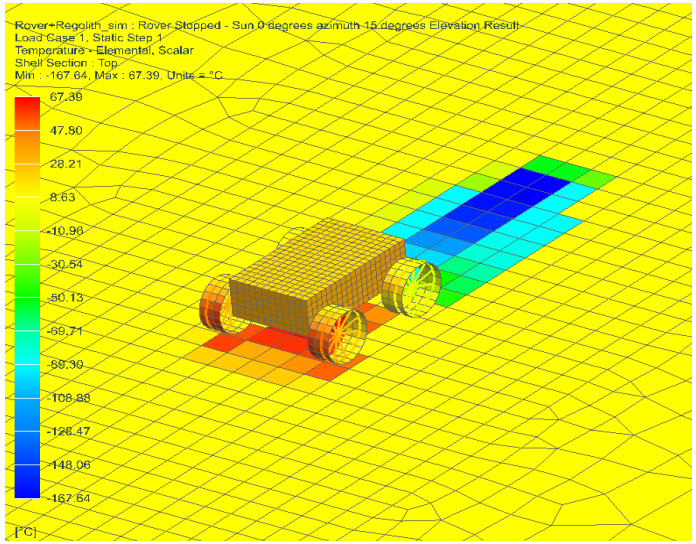

Heat Dissipation of Radiators at 35ºC Using Two Surface Temperature Models (+ve = heat out)

		Heat Load (W)		Flux (Wm^{-2})		
Face	Area (m^2)	Fixed	Variable	Fixed	Variable	Fixed/Variable
Top	0.15	55.3	55.3	368.5	368.5	1.00
+X	0.075	20.6	19.0	274.8	253.2	1.09
-X	0.075	20.6	19.0	274.8	253.5	1.08
-Y	0.045	-0.1	-1.9	-2.3	-42.5	0.05
+Y	0.045	14.4	16.5	319.8	367.3	0.87
Bottom	0.15	25.5	4.2	170.1	27.9	6.11

Stationary Rover

- Top Surface
  - No change as expected

Rover and lunar surface temperature, midday, latitude 75º

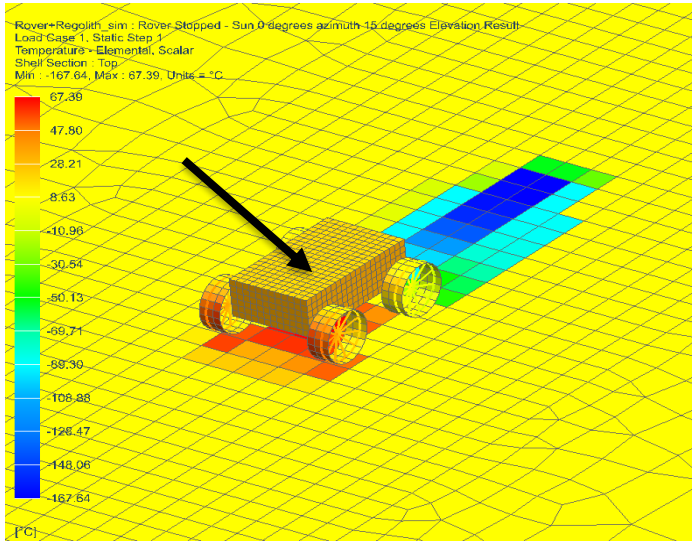

Heat Dissipation of Radiators at 35ºC Using Two Surface Temperature Models (+ve = heat out)

		Heat Load (W)		Flux (Wm^{-2})		
Face	Area (m^2)	Fixed	Variable	Fixed	Variable	Fixed/Variable
Top	0.15	55.3	55.3	368.5	368.5	1.00

Stationary Rover

- +X and -X, side radiators
  - Decreased heat load by 9%
  - Local heating of lunar surface
  - 21ºC close to rover
  - -1ºC far field

Rover and lunar surface temperature, midday, latitude 75º

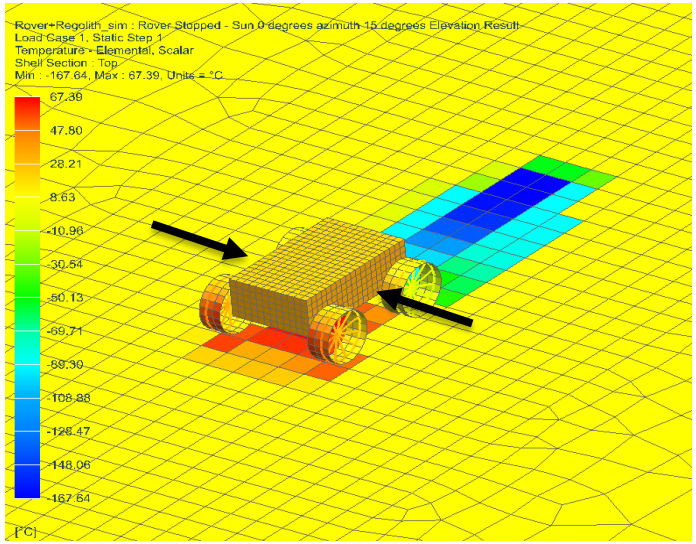

Heat Dissipation of Radiators at 35ºC Using Two Surface Temperature Models (+ve = heat out)

		Heat Load (W)		Flux (Wm^{-2})		
Face	Area (m^2)	Fixed	Variable	Fixed	Variable	Fixed/Variable
+X	0.075	20.6	19.0	274.8	253.2	1.09
-X	0.075	20.6	19.0	274.8	253.5	1.08

Stationary Rover

Rover and lunar surface temperature, midday, latitude 75º

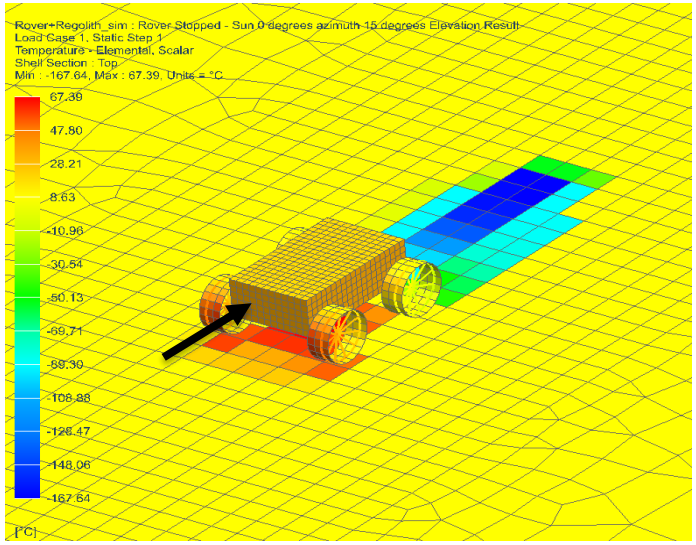

- -Y radiator
  - Sun side with lowest dissipation
  - Negative for both case, panel hotter than 35ºC without dissipation

Heat Dissipation of Radiators at 35ºC Using Two Surface Temperature Models (+ve = heat out)

		Heat Load (W)		Flux (Wm^{-2})		
Face	Area (m^2)	Fixed	Variable	Fixed	Variable	Fixed/Variable
-Y	0.045	-0.1	-1.9	-2.3	-42.5	0.05

Stationary Rover

- +Y radiator
  - Increased dissipation
  - Lunar surface at -167ºC in the rover's shadow

Rover and lunar surface temperature, midday, latitude 75º

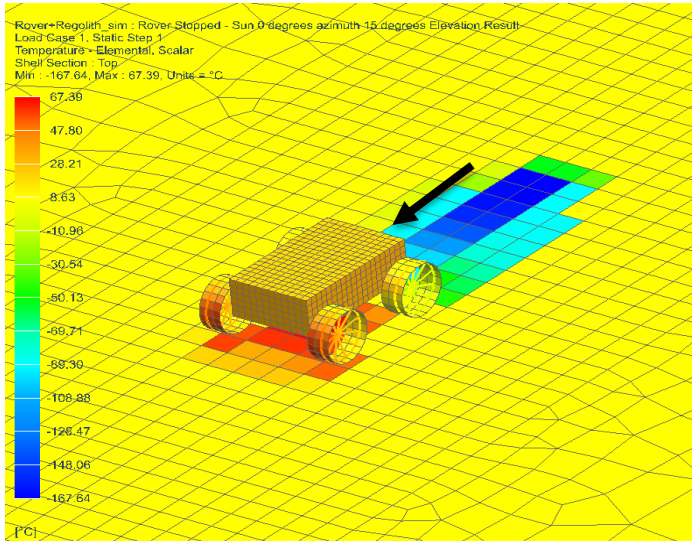

Heat Dissipation of Radiators at 35ºC Using Two Surface Temperature Models (+ve = heat out)

		Heat Load (W)		Flux (Wm^{-2})		
Face	Area (m^2)	Fixed	Variable	Fixed	Variable	Fixed/Variable
+Y	0.045	14.4	16.5	319.8	367.3	0.87

Stationary Rover

Rover and lunar surface temperature, midday, latitude 75º

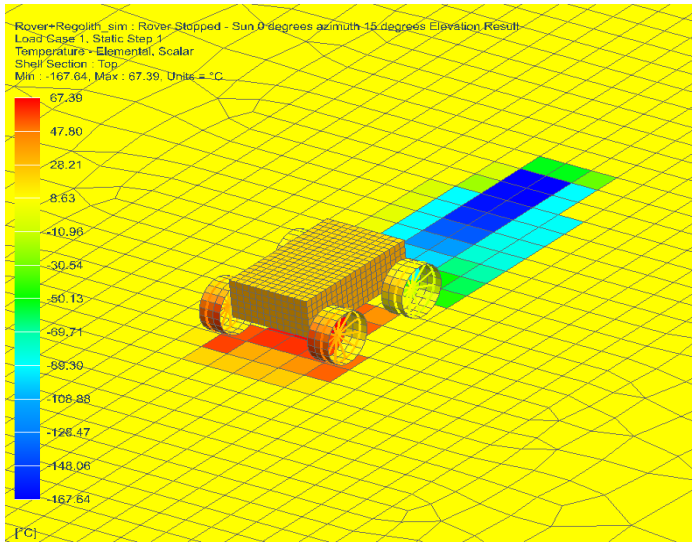

- Bottom radiator
  - Dissipation grossly overestimated
  - Lunar surface under rover heated by radiator
  - Variable lunar surface temperature model needed for bottom radiator modelling

Heat Dissipation of Radiators at 35ºC Using Two Surface Temperature Models (+ve = heat out)

		Heat Load (W)		Flux (Wm^{-2})		
Face	Area (m^2)	Fixed	Variable	Fixed	Variable	Fixed/Variable
Bottom	0.15	25.5	4.2	170.1	27.9	6.11

Moving Rover

- Thermal Response of Lunar surface
  - Response of model to step change in environmental inputs
  - Lunar mid-day starting temperatures
  - Transient lunar night analysis
  - Initial cool down rate of 0.035ºCs^{-1}

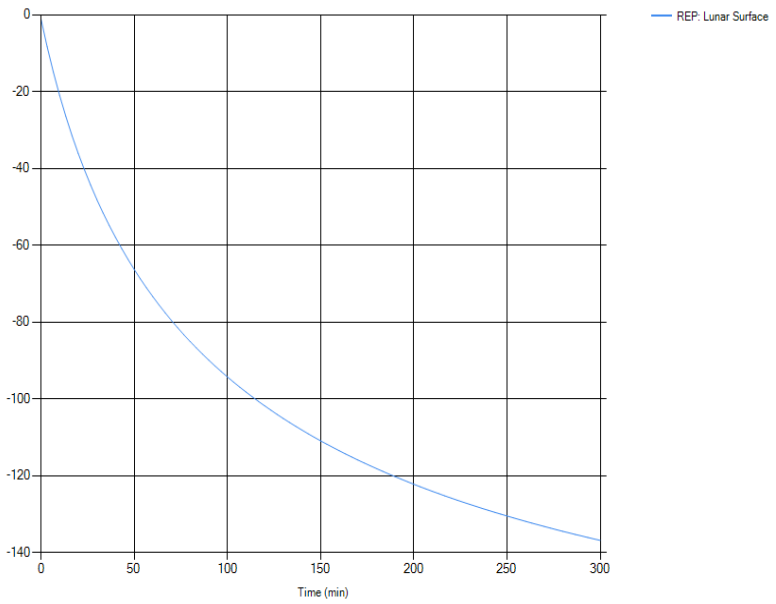

Lunar Surface Cool Down

Moving Rover

- Moving rover
  - Knowing the length of the shadowed region and speed of rover we can compute temperature drop of lunar surface
  - Small except for longest shadow and lowest speed
  - Low speeds typical of Mars rovers
  - Lunar Rovers can move significantly faster

Temperature Drop (°C) due to Moving Rover Shadow

	Rover Speed (m/s)				
Shadow Length (m)	0.01	0.05	0.1	0.2	0.5
3.0	10.566	2.113	1.057	0.528	0.211
1.0	3.522	0.704	0.352	0.176	0.070
0.5	1.761	0.352	0.176	0.088	0.035

Moving Rover

- Moving Rover verification
  - Verified by simulating the motion of the rover moving at 0.01m/s
  - Temperature drop of 2.8ºC, versus 3.2 ºC using hand calculation

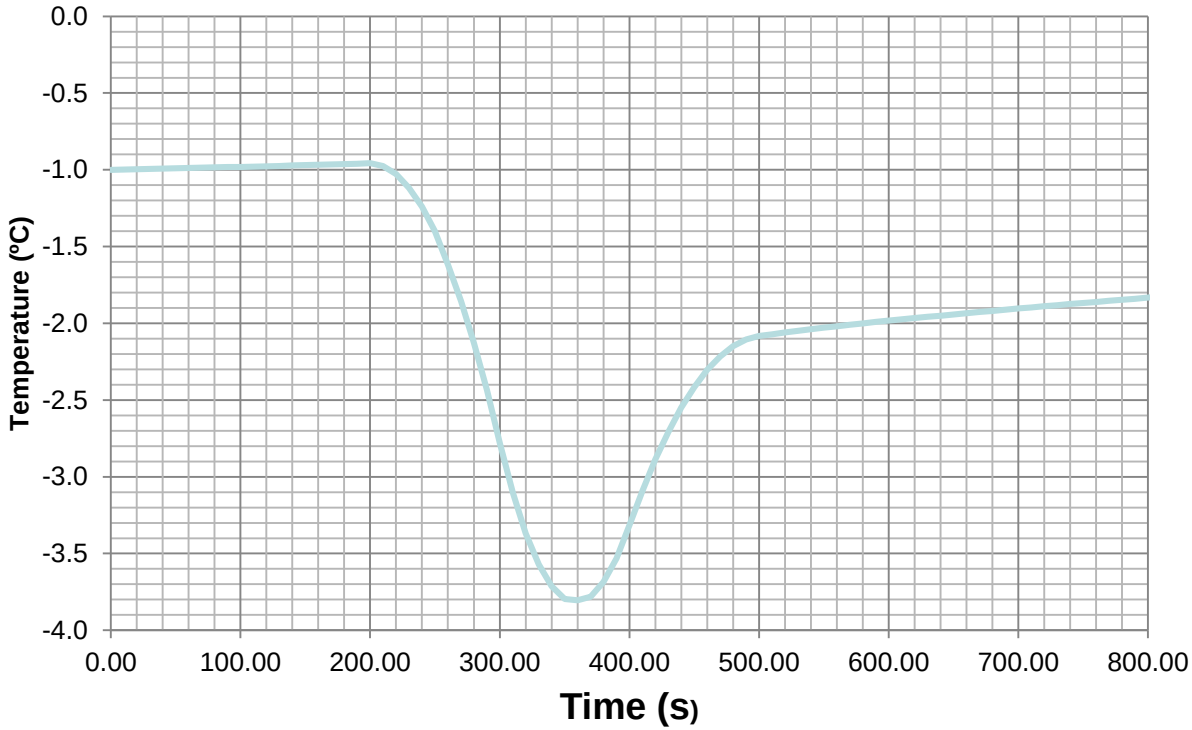

Variation of lunar surface temperature as rover passes over.

Moving Rover

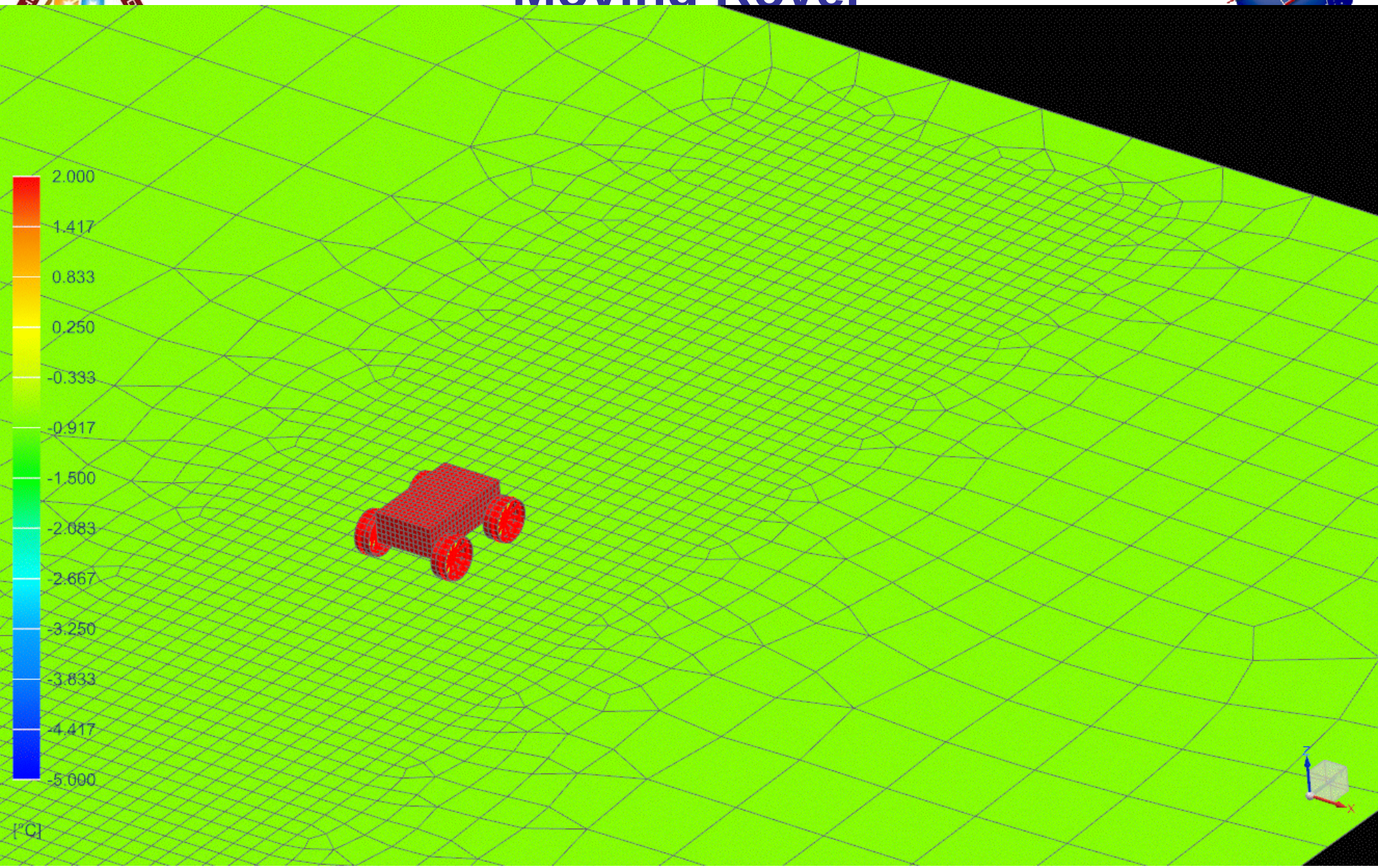

Discussion

- Discussion
  - The work presented here uses an existing model of the lunar regolith and demonstrates how it can be leveraged to determine the interaction between the lunar surface and a lunar rover
  - Assuming a constant surface temperature can lead to errors
    - Side radiators dissipation overestimated by 9%
    - Shadowed radiator underestimated by 13%
    - Bottom radiator dissipation grossly overestimated
  - Fluctuations caused by moving rover are unlikely to be significant, except for the case of a large slow moving rover

References

1. R. J. Christie, D.W. Platch and M.M. Hasan. “A Transient Thermal Model and Analysis of the Lunar Surface and Regolith for Cryogenic Fluid Storage”, NASA/TM-2008-215300.