Transient Heater Analysis for Orion Thermal Vacuum Testing

Jarred Wilhite[1], Erik Stalcup[2]

Presented By
Jarred Wilhite

Thermal & Fluids Analysis Workshop
TFAWS 2018
August 20-24, 2018
NASA Johnson Space Center
Houston, TX

Agenda

- Background
- Approach
- Model
- Results
- Conclusions

Background

- Orion Multi-Purpose Crew Vehicle (MPCV)
  - Developed for future spaceflight missions (EM-1, EM-2)
- Thermal Vacuum Testing at Plum Brook Station (2019)
  - Space Environments Complex (SEC)
  - Space Simulation Vacuum Chamber
    - 122 ft. height, 100 ft. diameter
  - 60-day test

T-VAC Test Setup at SEC

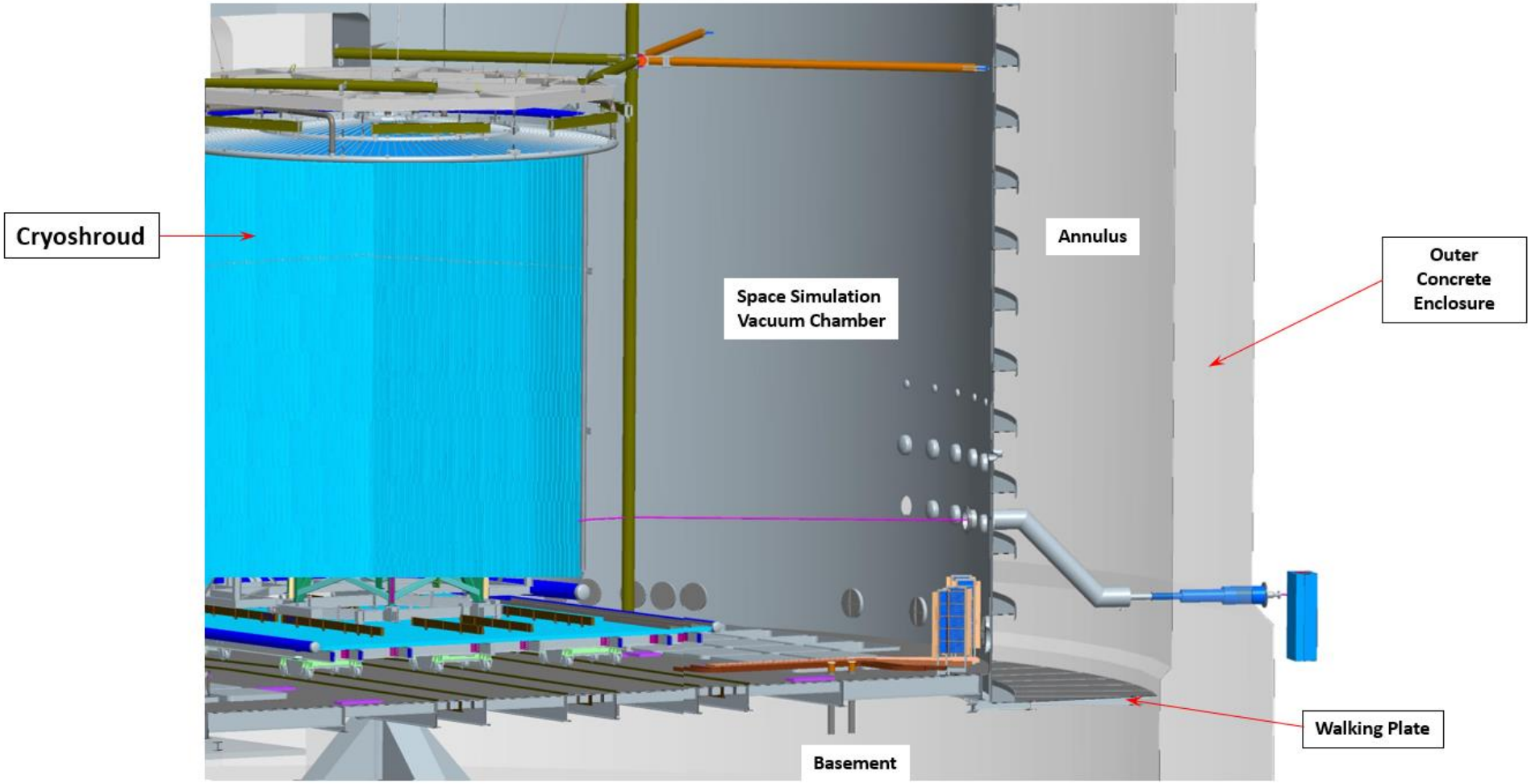

Approach

- Used Thermal Desktop to model and simulate SEC during T-Vac testing
  - To determine temperatures that will be reached in various areas in SEC during testing
  - Chamber, cryoshroud, outer concrete enclosure, basement, GN_2 piping, etc. all included

- Results from initial analysis of SEC model
  - Showed the chamber floor to reach very low temperatures (below -20°F)

Problem

- Hardware located near the chamber floor needs to be maintained above minimum operating temperature
  - Elastomeric seals, Capralon bearing pads (-20°F), O-rings, etc.

- Ways to prevent the chamber floor from reaching these temperatures
  - Add patch heaters to colder areas of chamber floor (pipe penetrations)
  - Add insulation to GN_2 pipes in the basement

Heaters

- OMEGALUX silicone rubber fiberglass heaters
  - Lightweight, thin, insulated, flexible
  - Size: 18” x 18”
  - Power: 1600 W
  - Watt Density: 5 W/in^2
- Heaters installed in bays located underneath chamber floor

Heater Location on SEC Chamber Floor

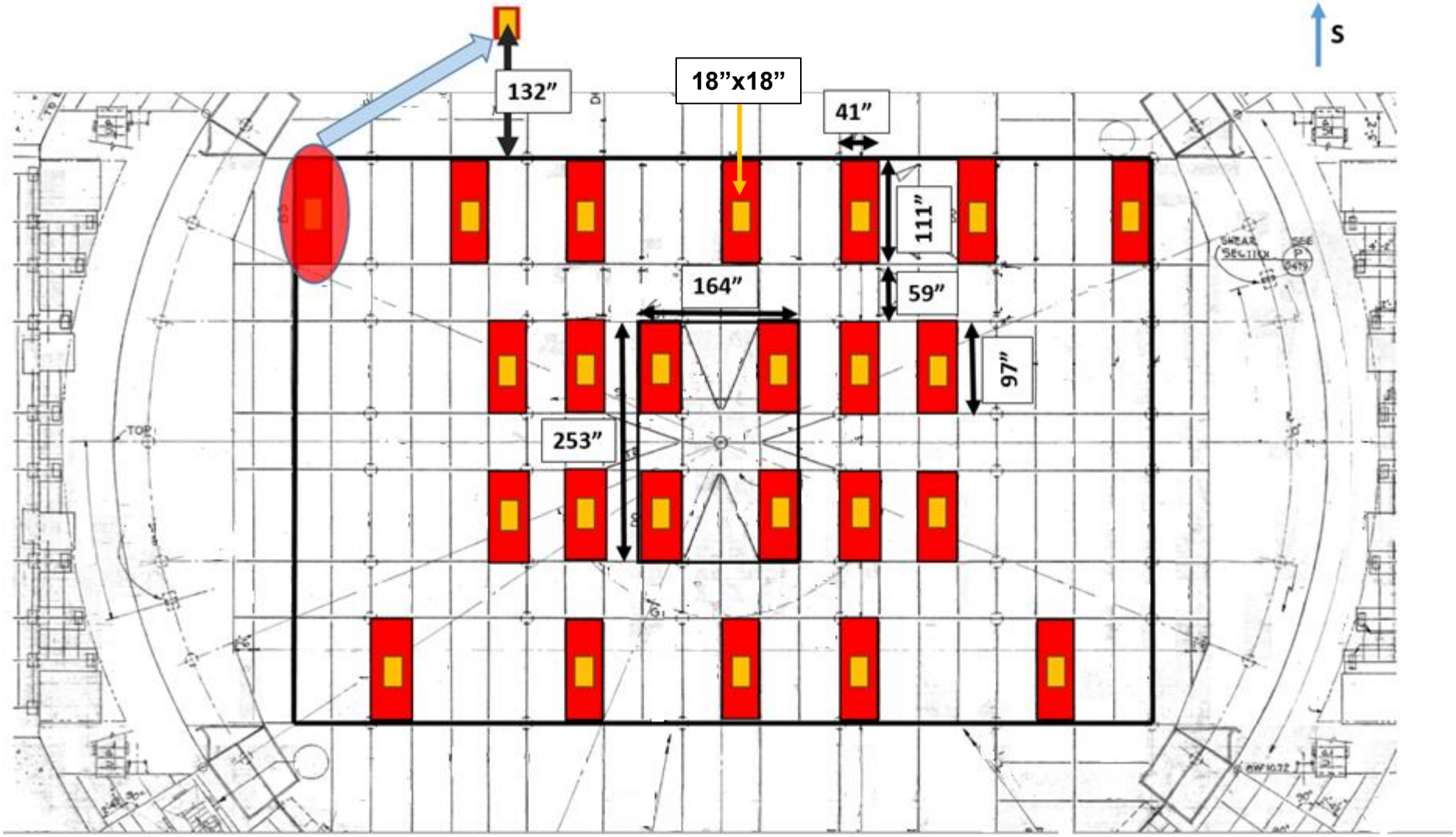

Heater Zones & Controllers

- 2 controllers were used to control operation of heaters
- Heaters turn on and off based on the temperatures of their sensing nodes (or controllers)
  - Turn on when sensing node temp < 40°F
  - Turn off when sensing node temp ≈ 50°F
- Ran steady & transient Case
  - 30-hour case
  - Heaters set to 0% power during steady-state
  - Heaters set to proportional mode during transient

Heater Zone Diagram in TD

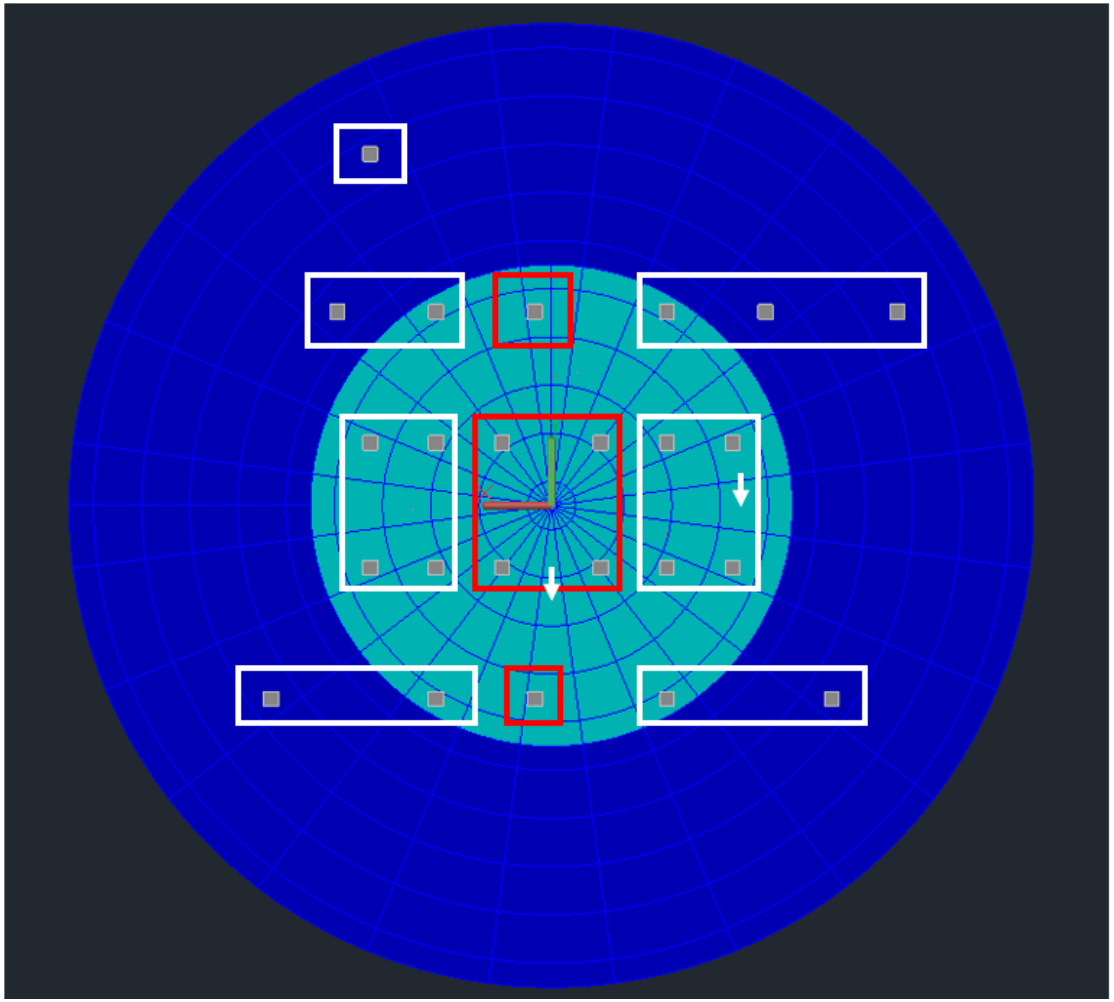

- **24 Heaters**
  - 1600 W
  - On temp = 40°F
  - Off temp = 50°F

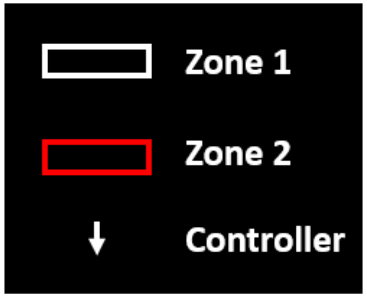

Heaters with Piping Configuration

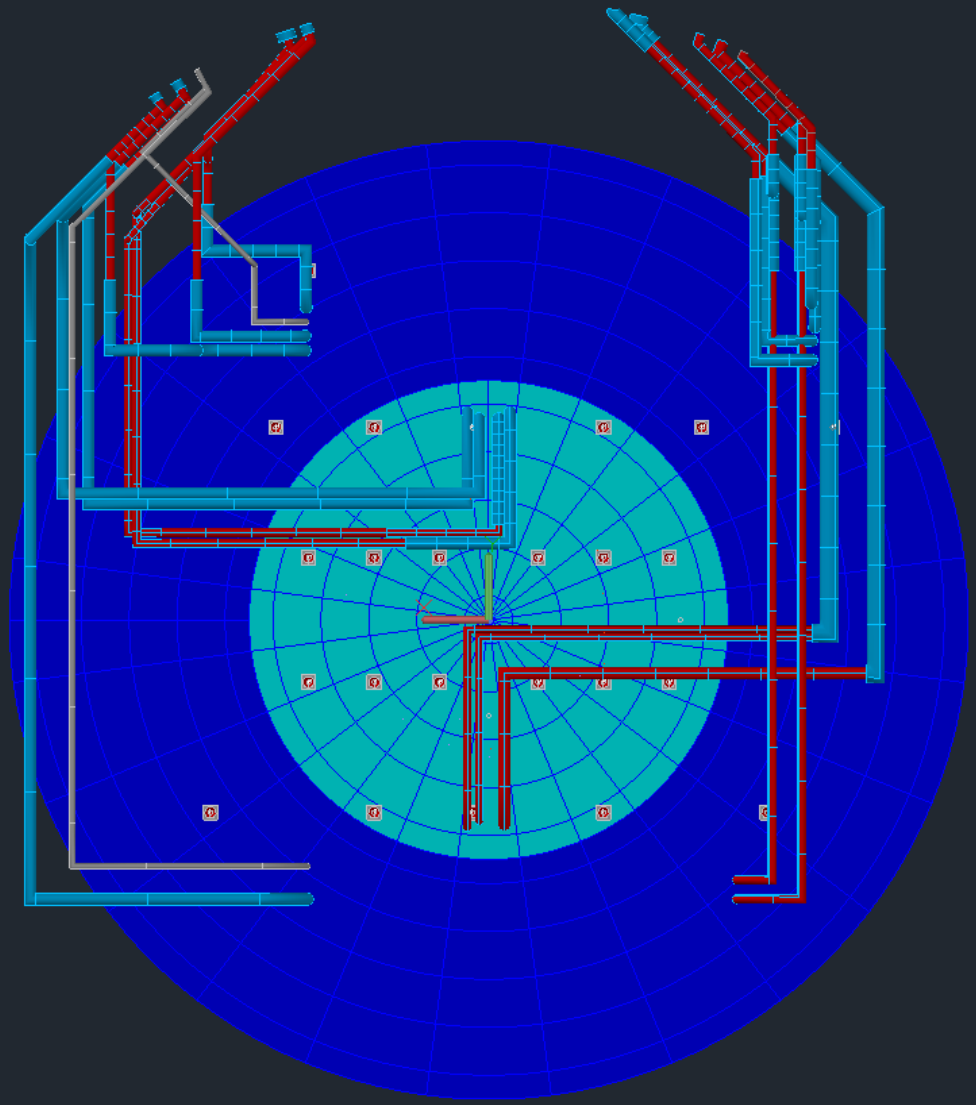

RESULTS

Chamber Floor Animation

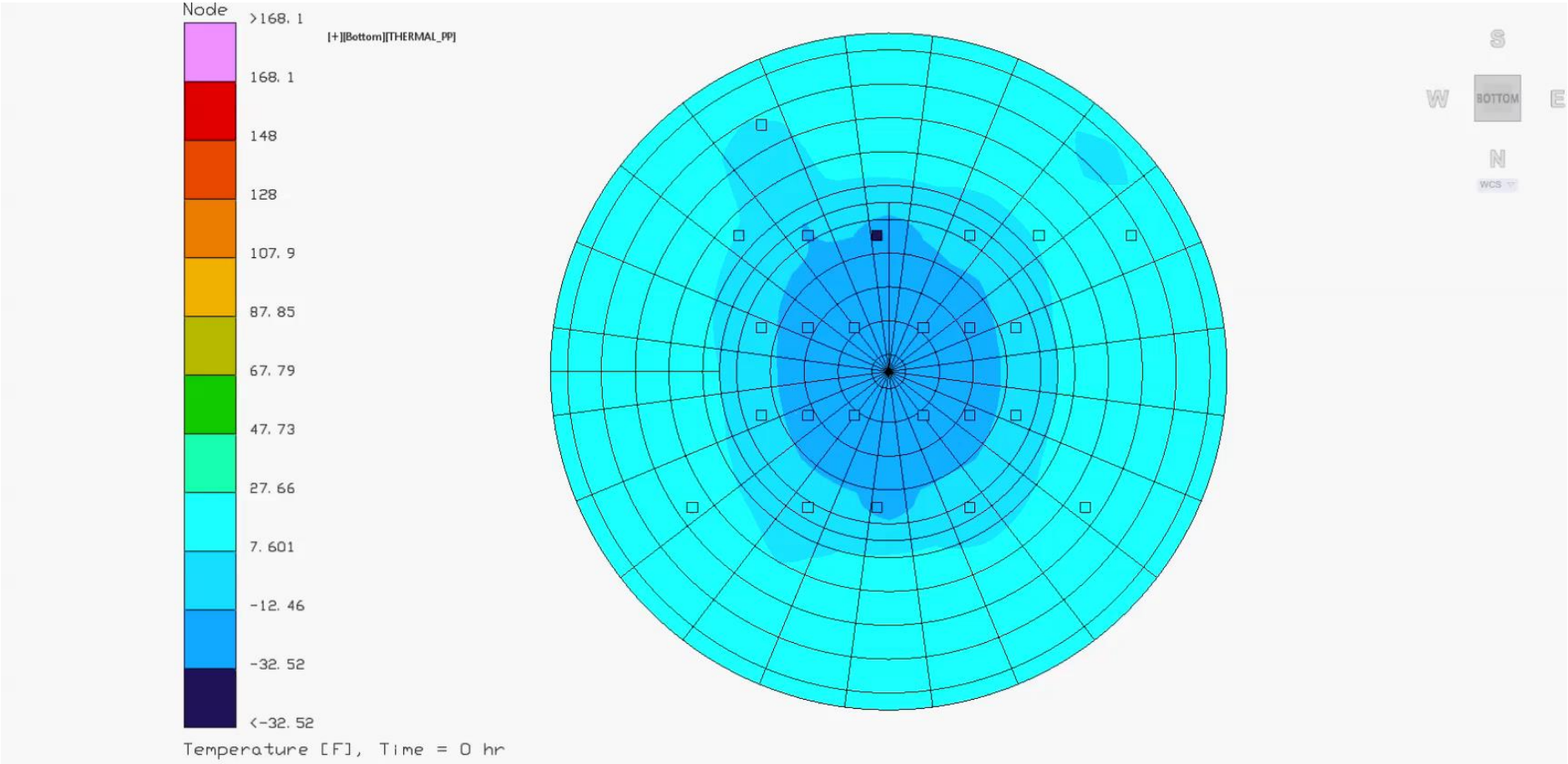

Transient Response of Sensing Nodes

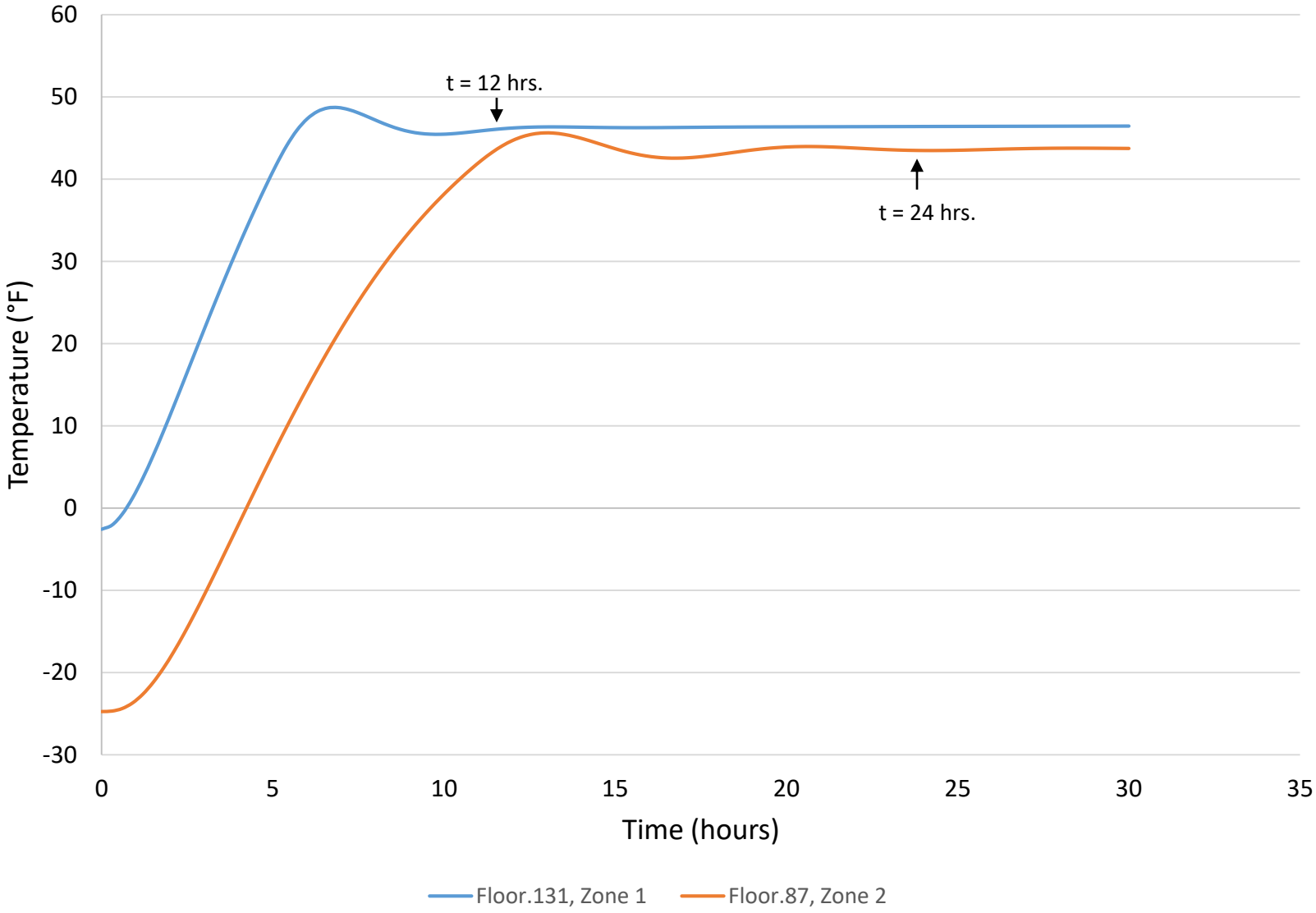

1st Row of Heaters

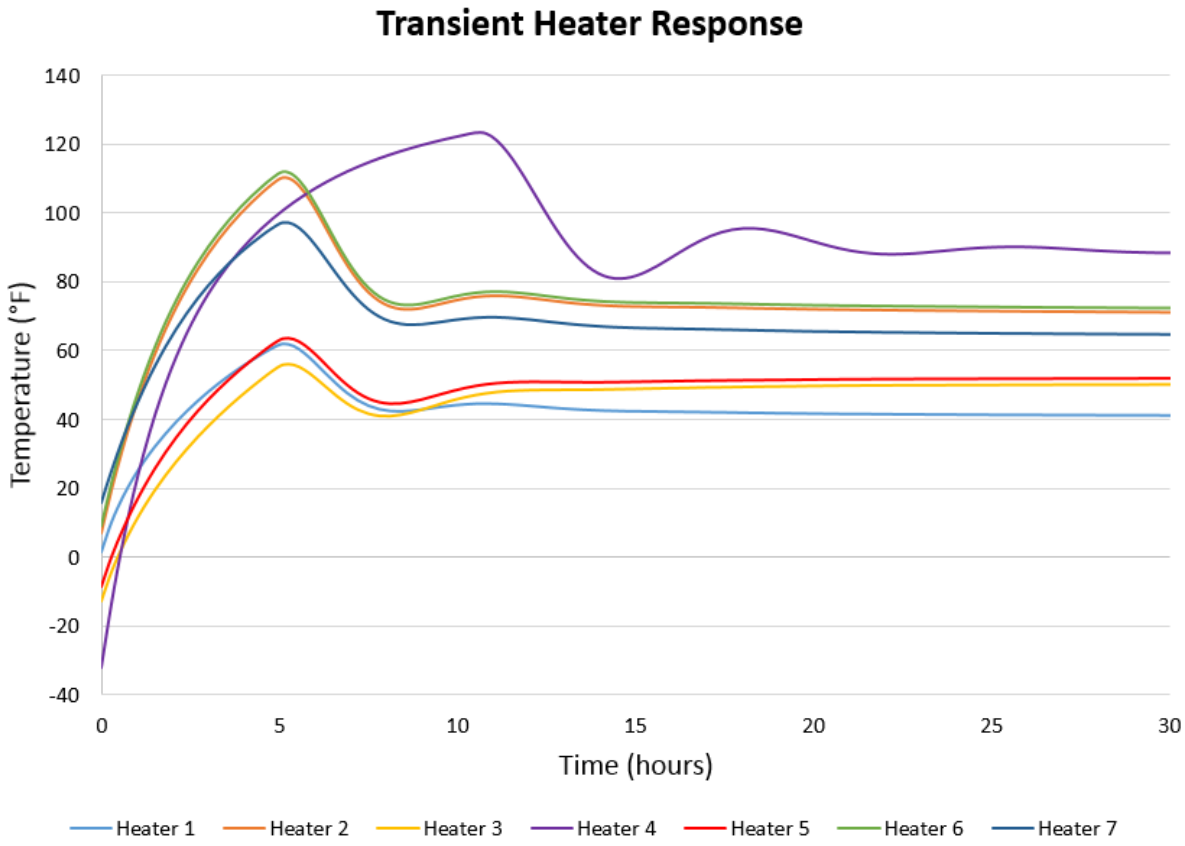

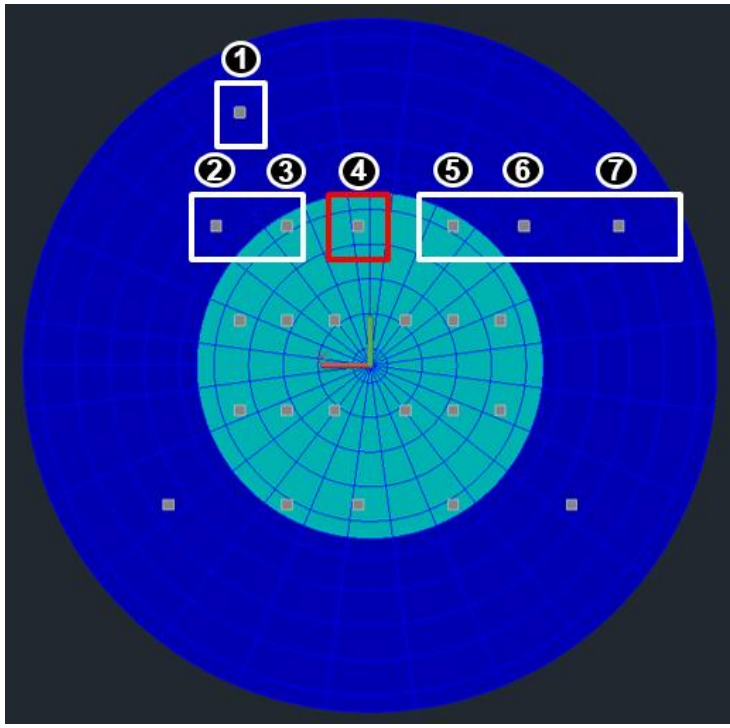

1st Row of Heaters

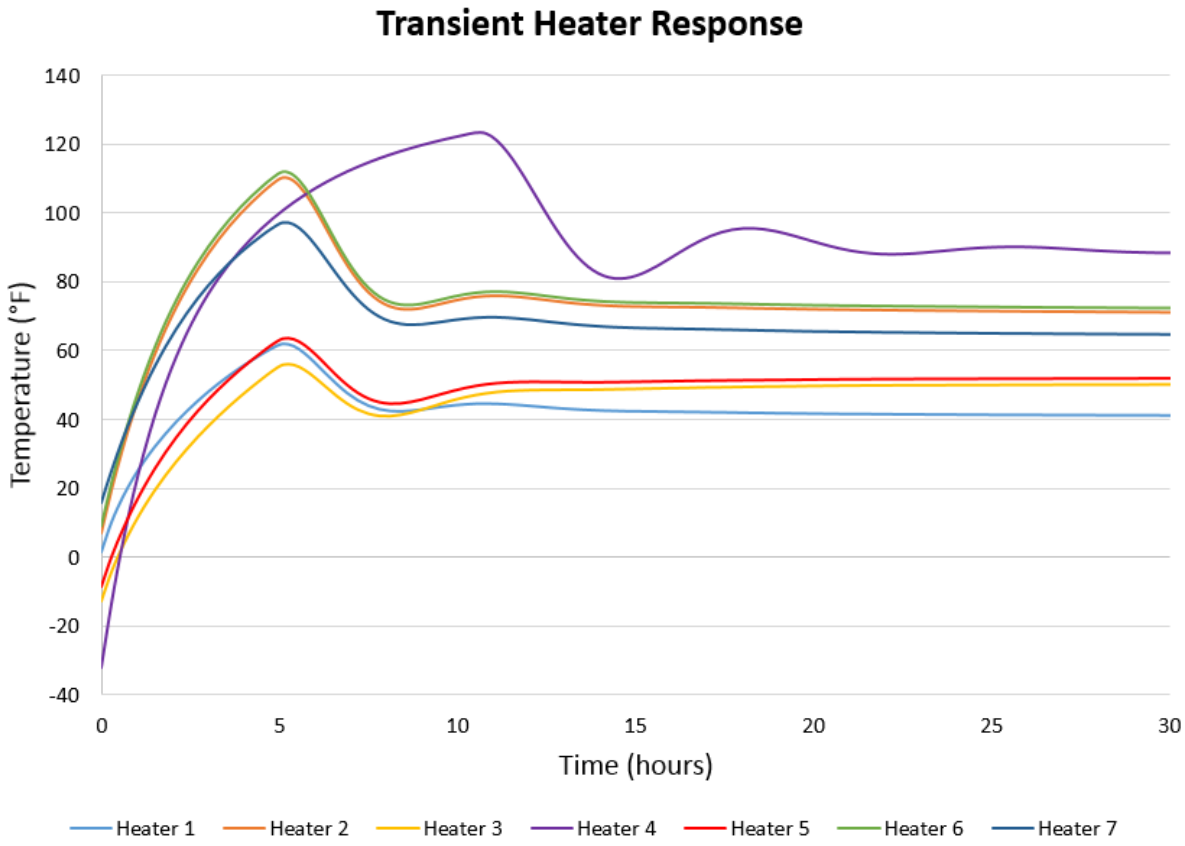

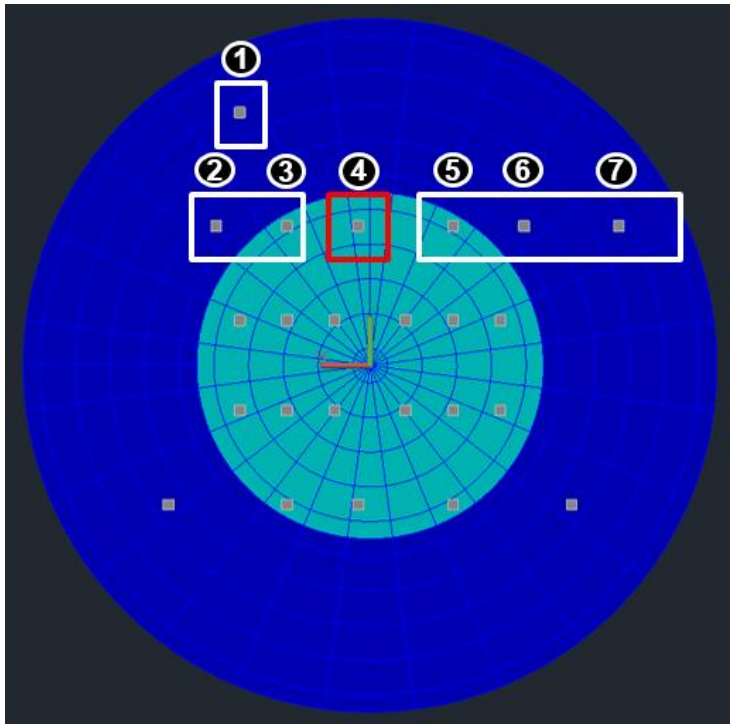

2nd Row of Heaters

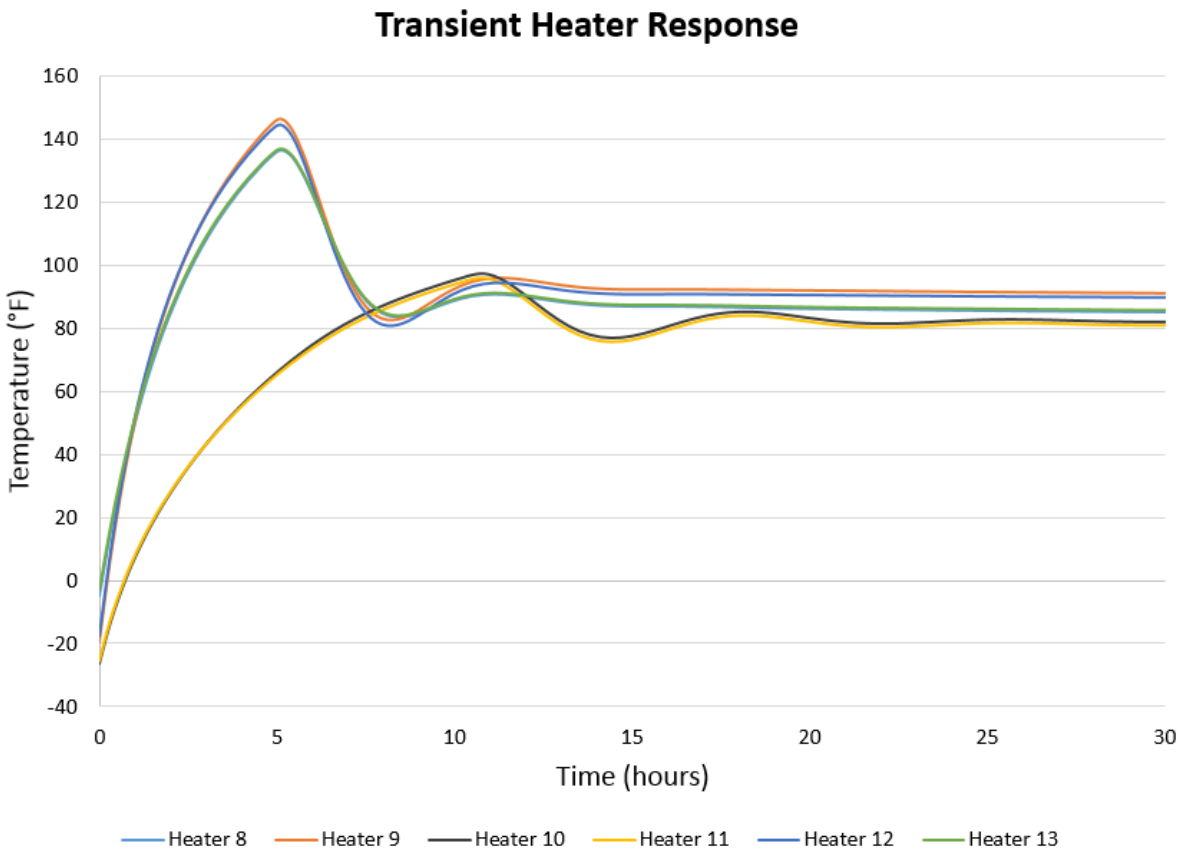

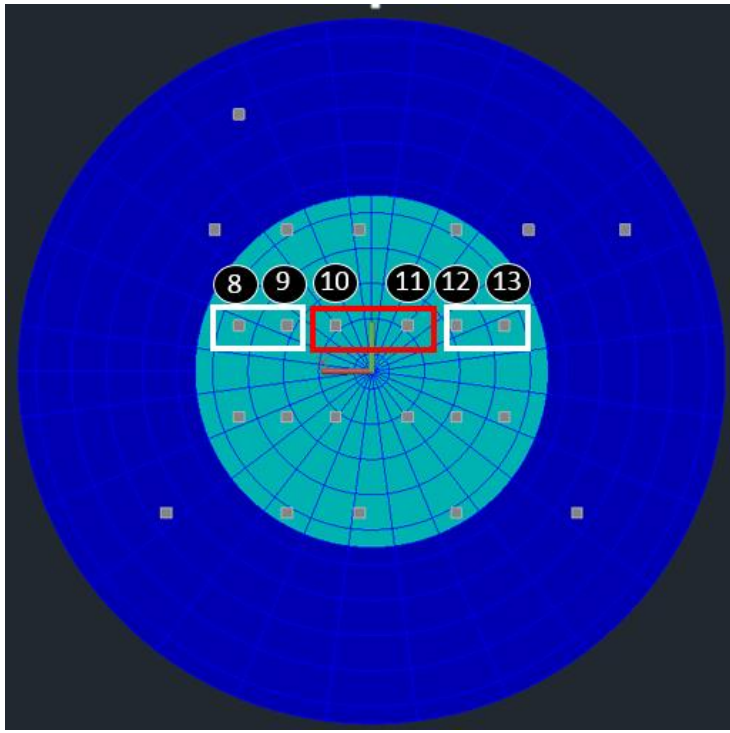

3rd Row of Heaters

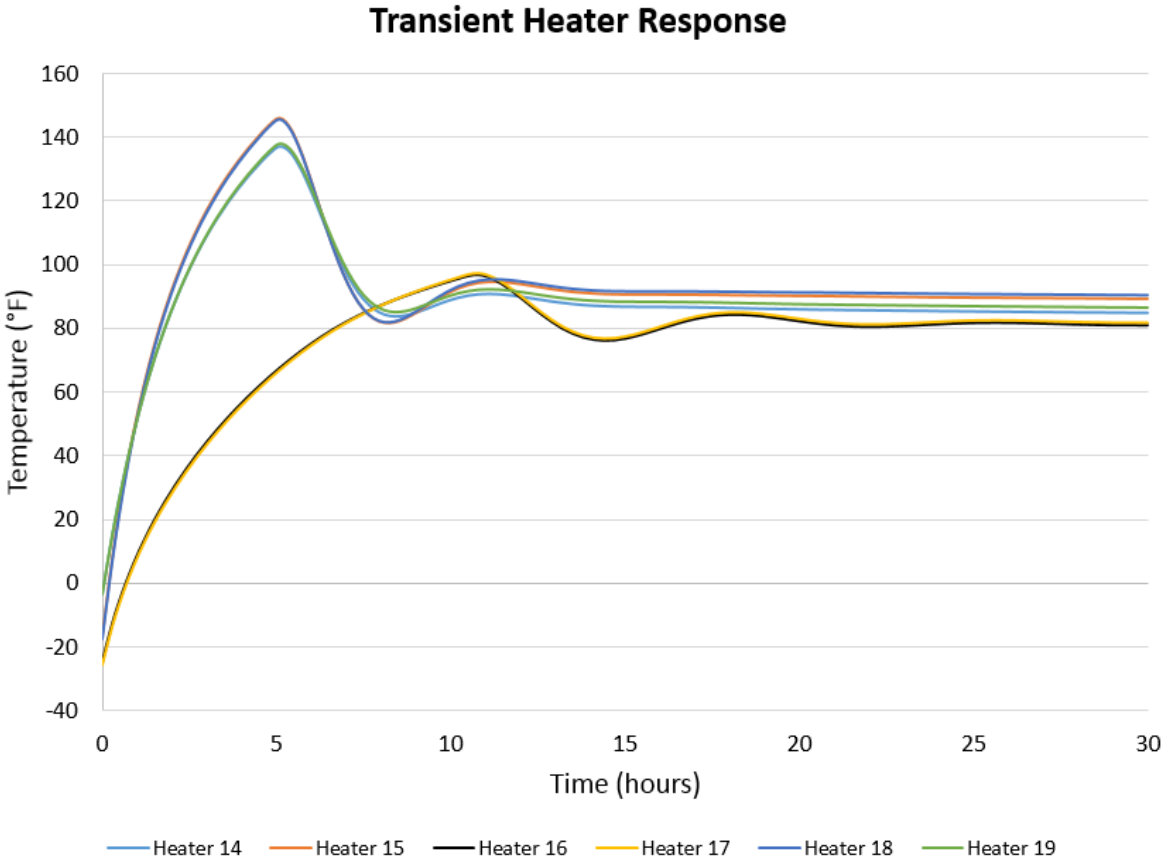

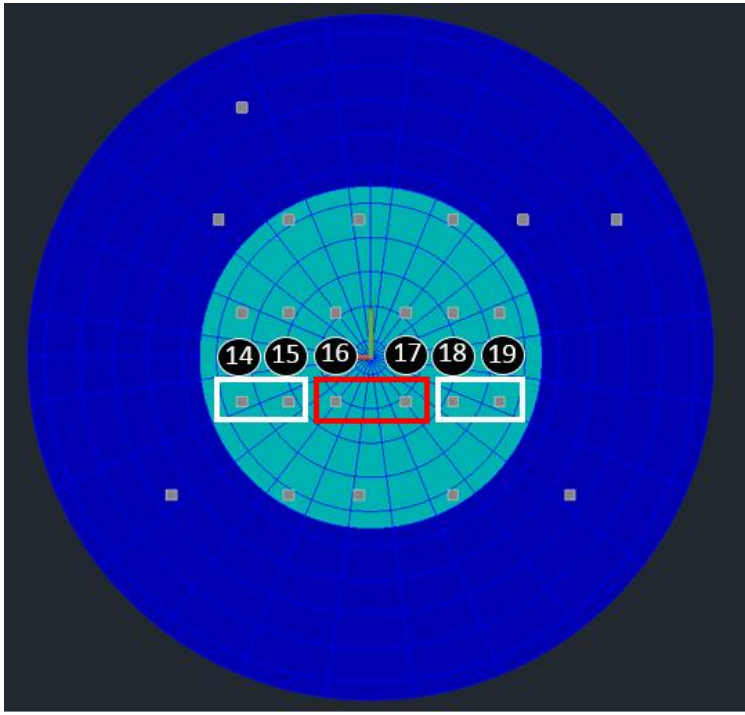

4th Row of Heaters

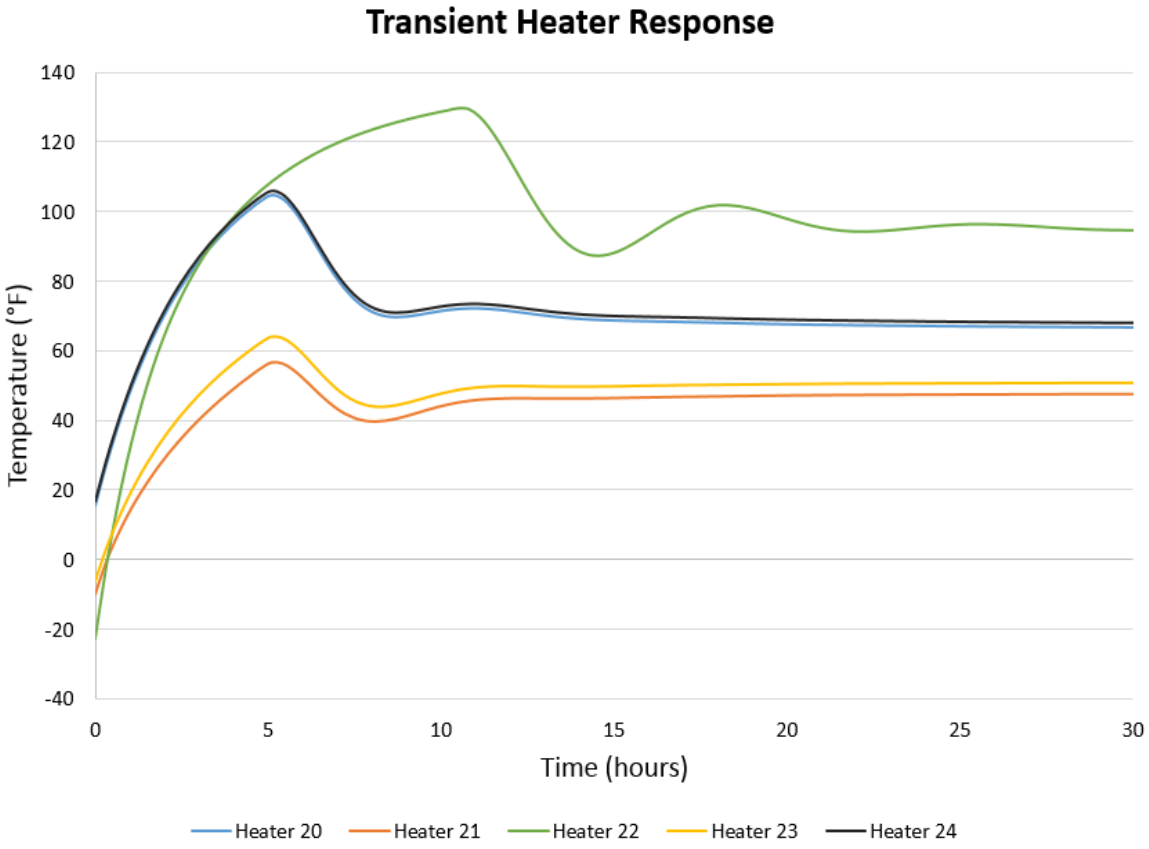

Heater Power vs. Time

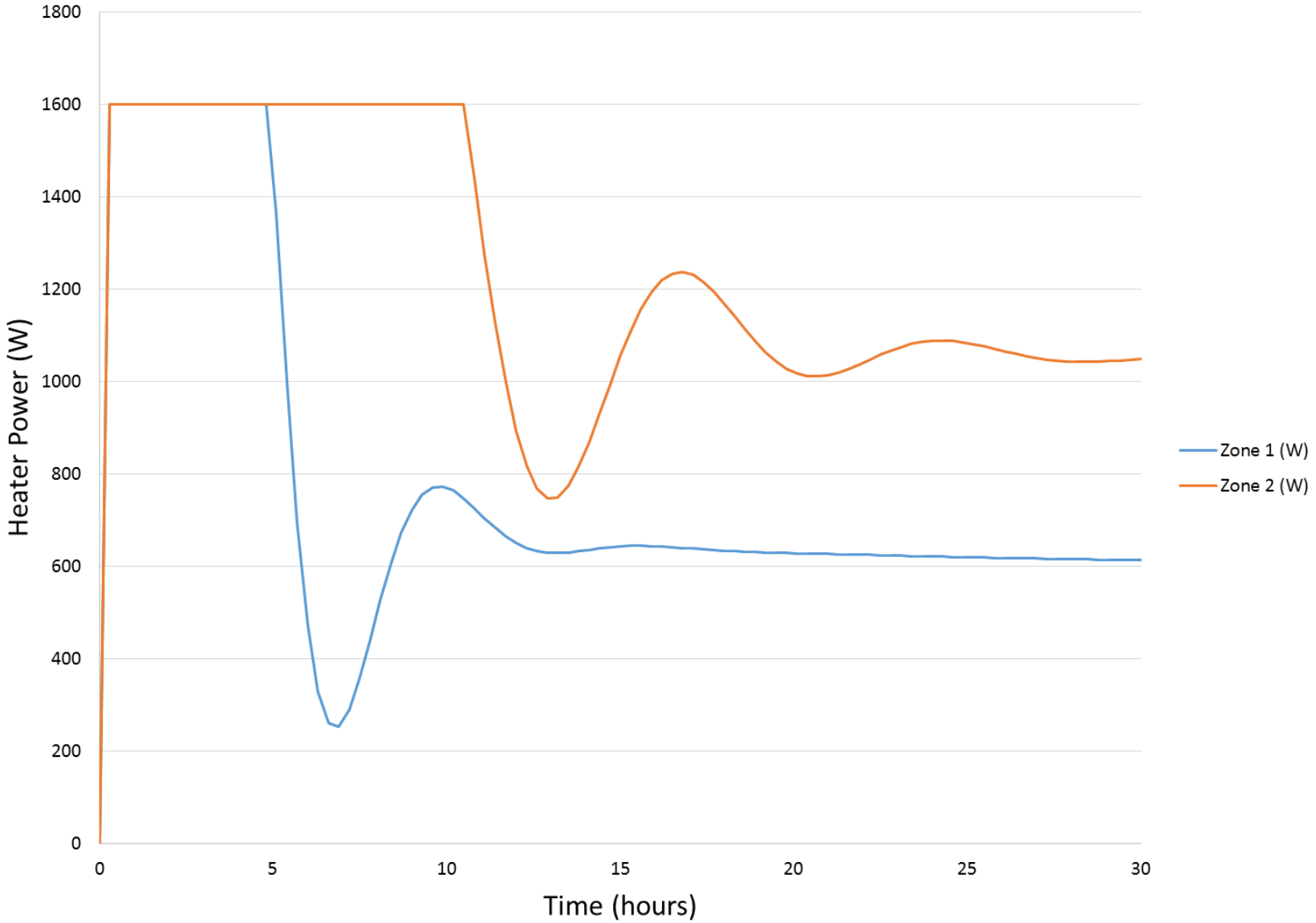

Results (at t=0 hrs.)

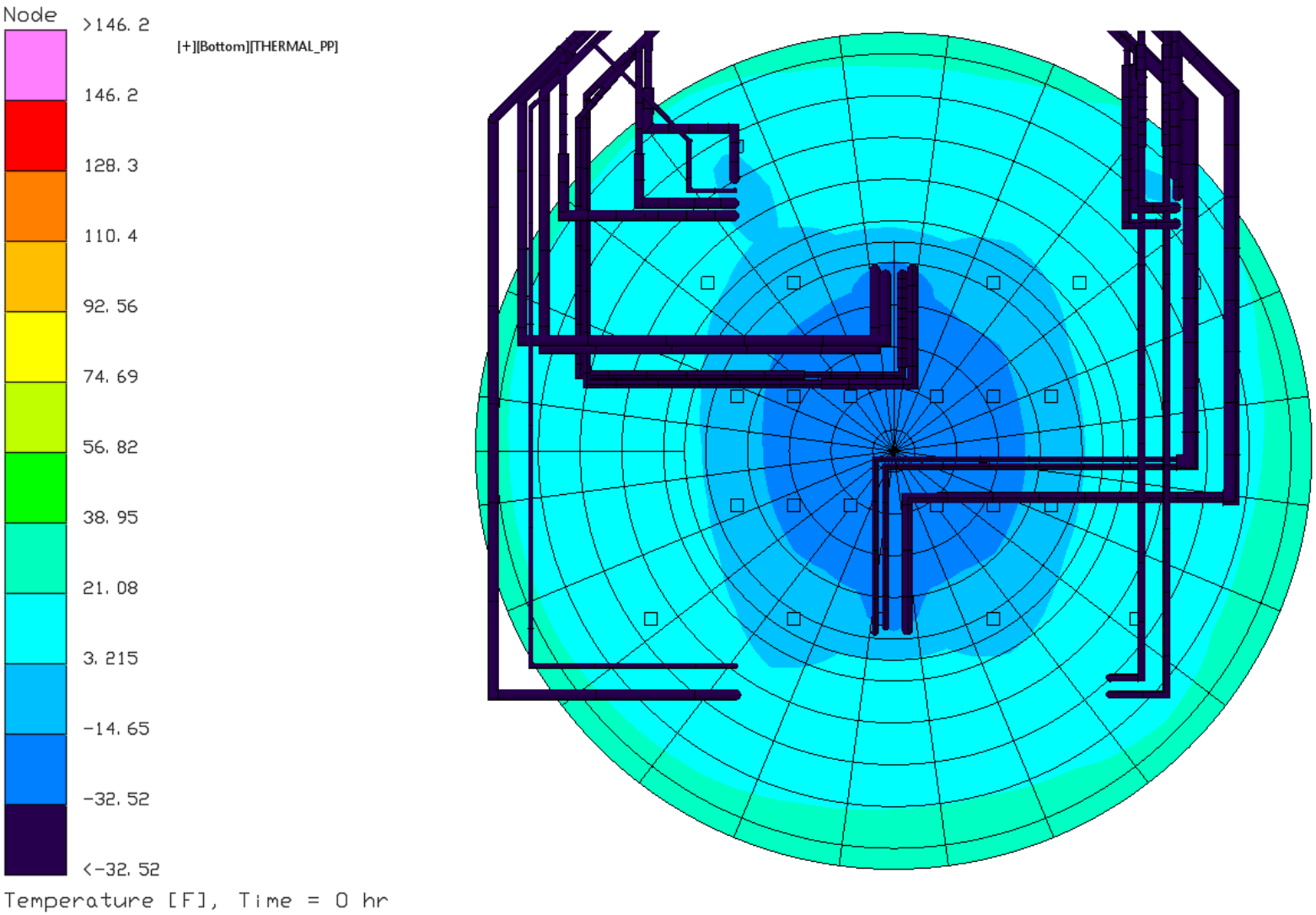

Results (at t=30 hrs.)

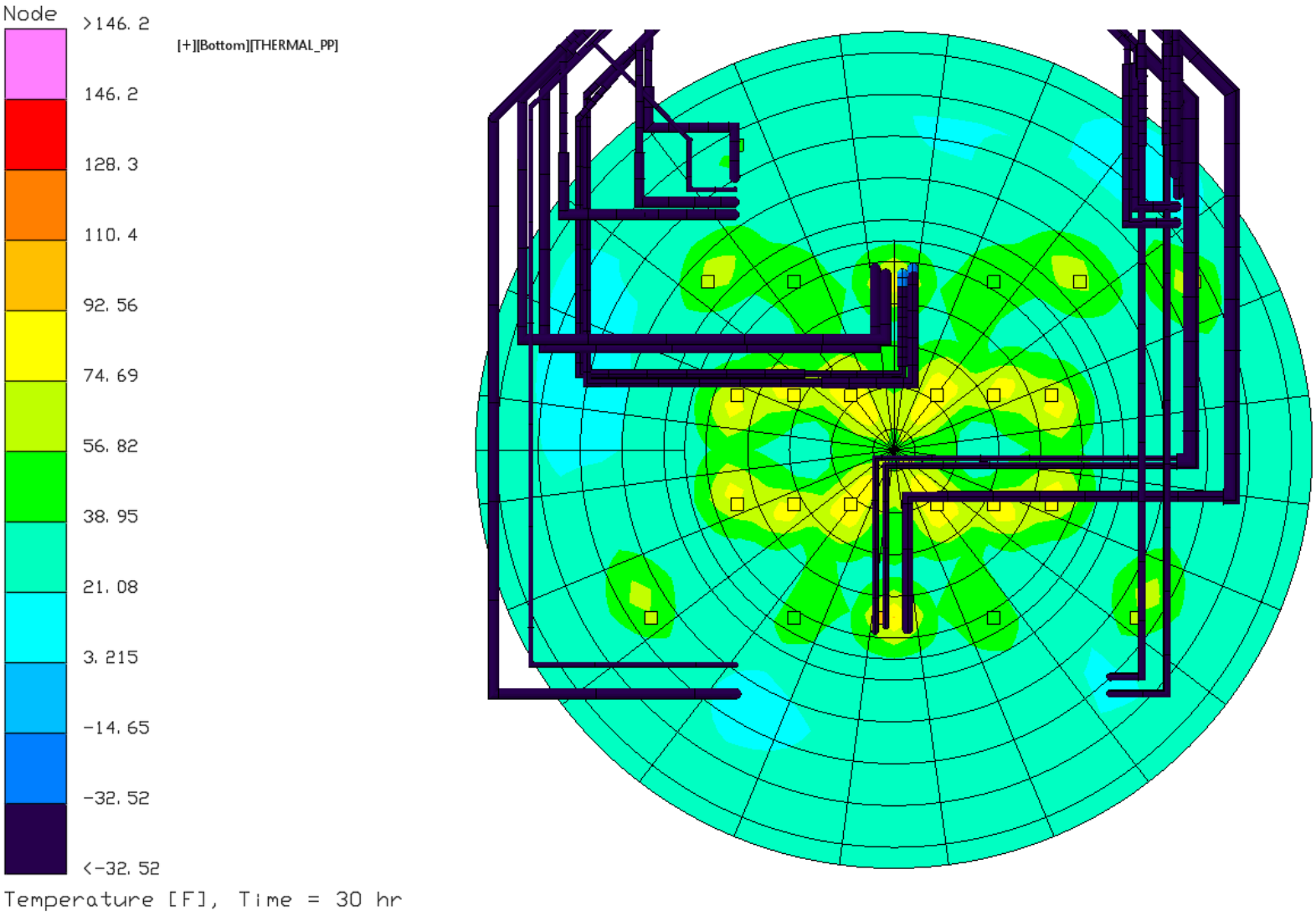

Summary

- Heaters had significant effect on chamber floor temp.
  - Able to observe effect by setting heaters to 0% power during steady state and proportional during transient
  - Min. temp. on chamber floor at end of run = 13°F
- Analysis shows that chamber floor temperatures will remain above -20°F when heaters are used
  - Min. operating temp. of hardware vital to T-VAC test
- Able to determine optimal configuration of heaters
  - Optimal location of heaters and controllers
  - Heater power kept within its limits (1620 W)
  - Heaters able to reach steady state within 30 hours

QUESTIONS