Design, Thermal and Computational Fluid Dynamic Analyses on Loop Heat Pipe Wick and Manufacturing with Selective Laser Melting

Togaru Lavanith, Naganathan Karthik
Mechanical Engineering Department, Kakatiya Institute of Technology & Science, Warangal - 506015, Telangana, India.

Presented By
Togaru Lavanith

Thermal & Fluids Analysis Workshop
TFAWS 2019
August 26-30, 2019
NASA Langley Research Center
Hampton, VA

Presentation Outline

- Loop Heat Pipes (LHP)
  - Design changes in LHP compared with Heat pipe and other 2-Phase Cooling Systems
  - Challenges involved with LHP
  - Schematic of LHP
  - Working of LHP
  - Start-up Behaviour
  - Heart of LHP Wick
  - Advantages of LHP

Presentation Outline

- Traditional Manufacturing of LHP
- Disadvantages of Traditional production
- Additive Manufacturing (AM)
- Types of AM
- Design methodology
- Analysis
- Final Optimized Design
- Applications
- Conclusions

LOOP HEAT PIPES

- **LOOP HEAT PIPES (LHP)** are competitive two-phase thermal management devices due to their ability to transfer high heat loads up to long distances and against gravitational field (i.e. at different orientations and tilts).
- LHP operation is based on the similar principle as conventional heat pipes i.e. cyclic evaporation and condensation process of working fluid circulated by capillary pumping inside wick.

Design changes in LHP Compared with Heat Pipe

- LHPs have more developed evaporator section with system of vapour removal channels and with evaporation from wick and wall interface.
- The porous wick structure in LHP is confined in the evaporator section only.
- Constructively, these unique structural modifications in the loop systems provide them with high heat flux transfer capability and ability to transfer heat over longer distances.

Comparison with Pumped loops

- On the other hand, when compared to the electrically pumped loops, LHPs provide passive thermal control system without any power demands, lower cost, longer system life, higher runtime reliability and thus sustainable cooling technology for the energy extensive electronic devices (cost/technology dominance).

Challenges Involved with LHP

- In LHP, the evaporator(comprising of compensation chamber (cc), secondary wick & primary wick), condenser(including flow tubes, fins and connectors) and heat transfer tubes (vapour and liquid lines) are each separately manufactured and then assembled through brazing/welding process.
- This adds to both cost as well as manufacturing complexity of LHP

Evaporator is the most complex and costly component of the LHP.

Challenges Involved with Evaporator

- Fabrication of evaporator includes machining internal flow channels in the tube (for cylindrical evaporator) or plate (for flat evaporator), sintering of wick structure, integration of wick inside the evaporator, sealing of evaporator container by welding/brazing and attachment of flow tubes.

Challenges Involved with LHP

- Wick is the most critical component of the LHP that dictates its runtime reliability and thermal performance.
- Sintering of the wick structure with the required physical properties needs rigorous evaluation and is one of the most challenging tasks in the fabrication of the LHP.

Any fabrication simplicity or technology development with respect to the above mentioned processes can provide the **consequential cost reduction** and promotion of the passive loop devices in high flux thermal management devices

Schematic of an LHP

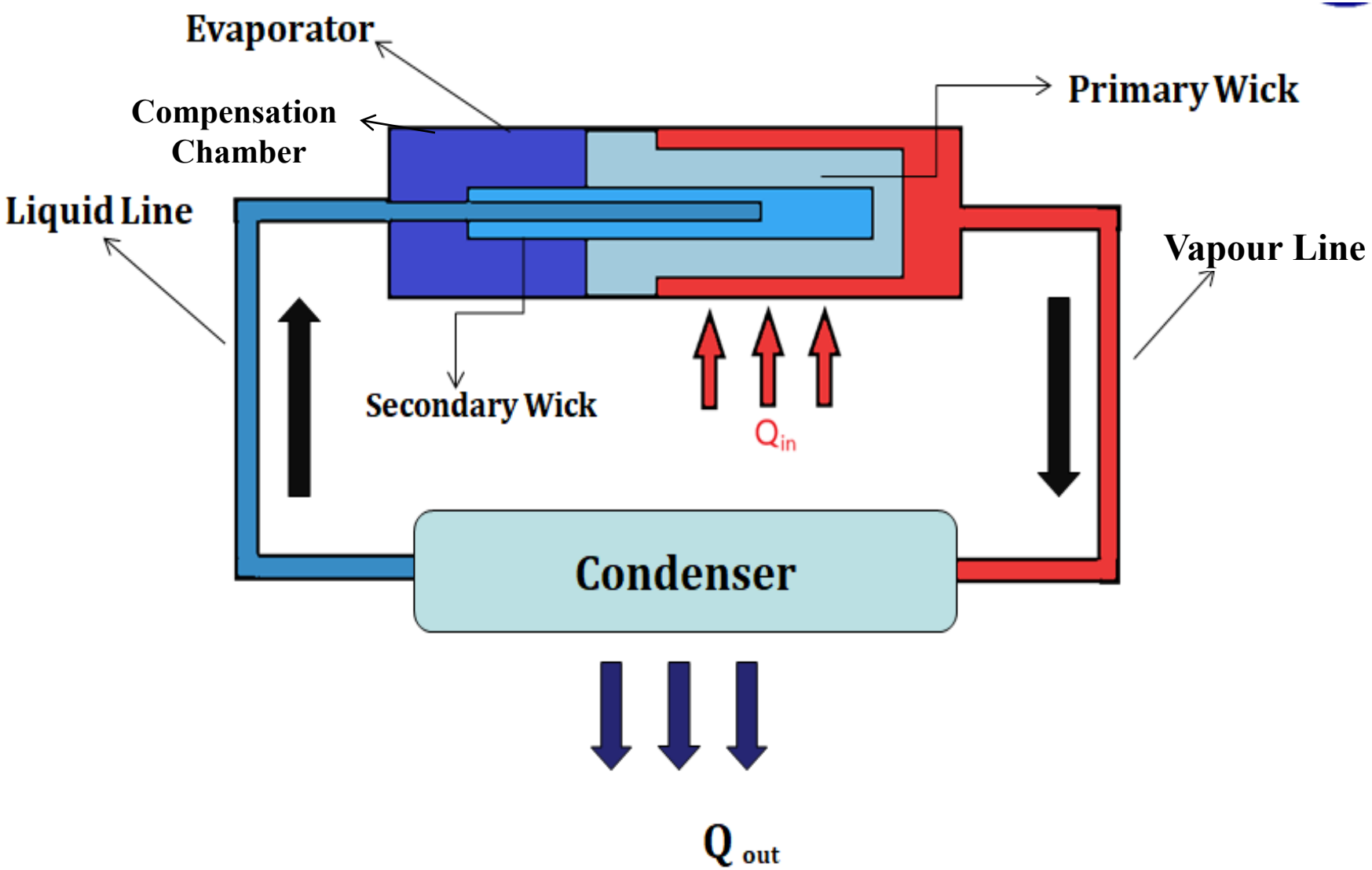

Parameters for Capillarity

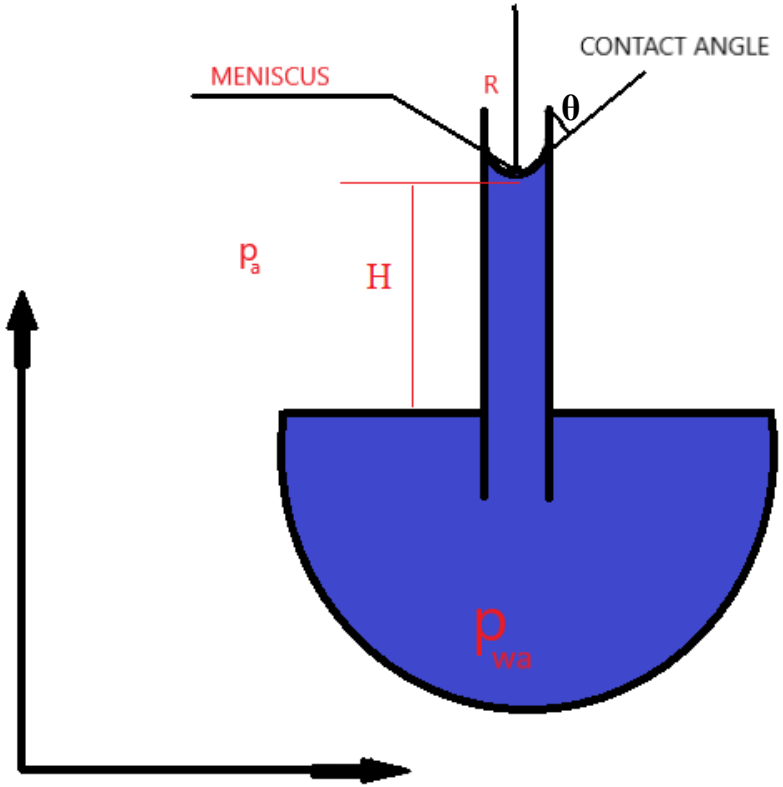

Components of LHP

- **Evaporator:** It is divided into Compensation Chamber(CC) and Evaporation region
  - CC acts like a reservoir of working fluid which compensates it during loop operation
  - Evaporation region takes heat from the external sources and heat the working fluid and loop operation starts from this region.

Components of LHP

- **Condenser:** It is used to change of vapour phase to Liquid phase of working Fluid.

- **Vapour and Liquid lines:** These are used for bringing the vapour generated at evaporator to condenser and liquid formed at condenser back to the CC of evaporator

Working Cycle Of LHP

LOOP HEAT PIPE CYCLE

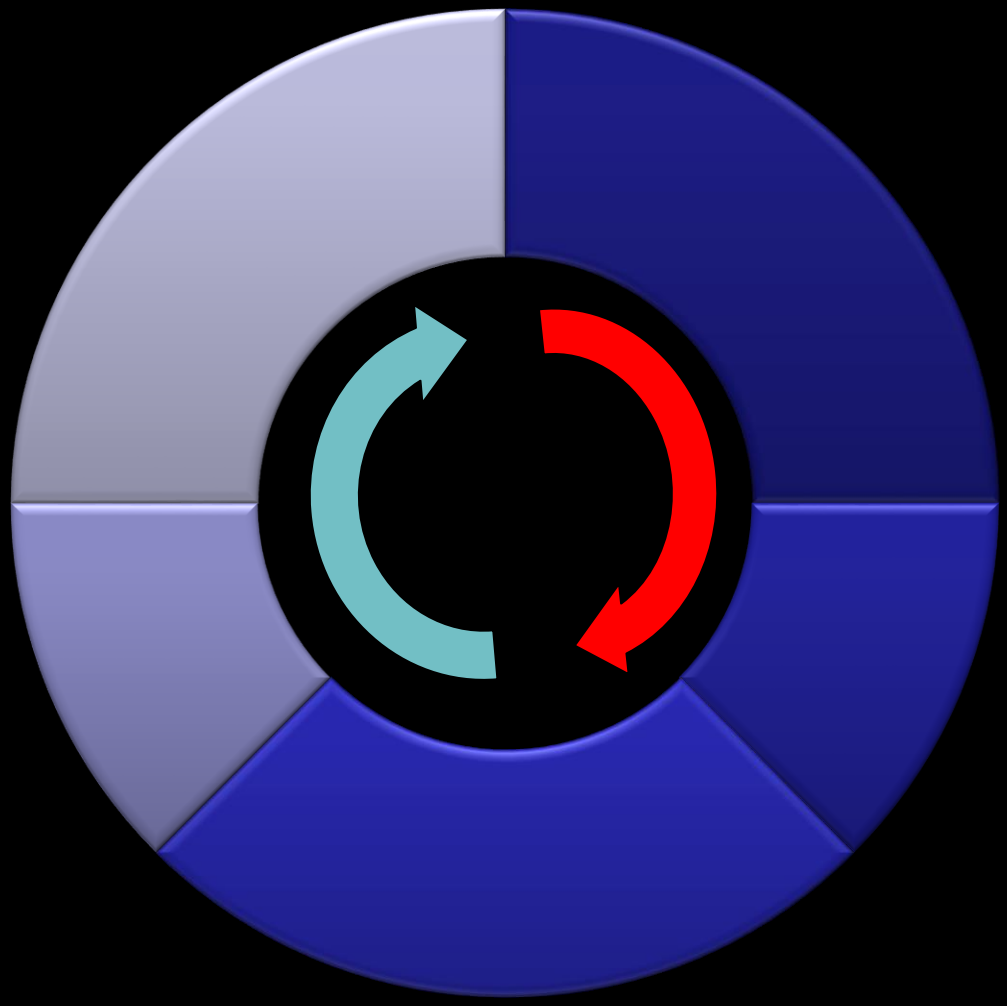

- EVAPORATOR
- VAPOUR LINE
- CONDENSER
- LIQUID LINE
- COMPENSATION CHAMBER

Process inside the Components of LHP

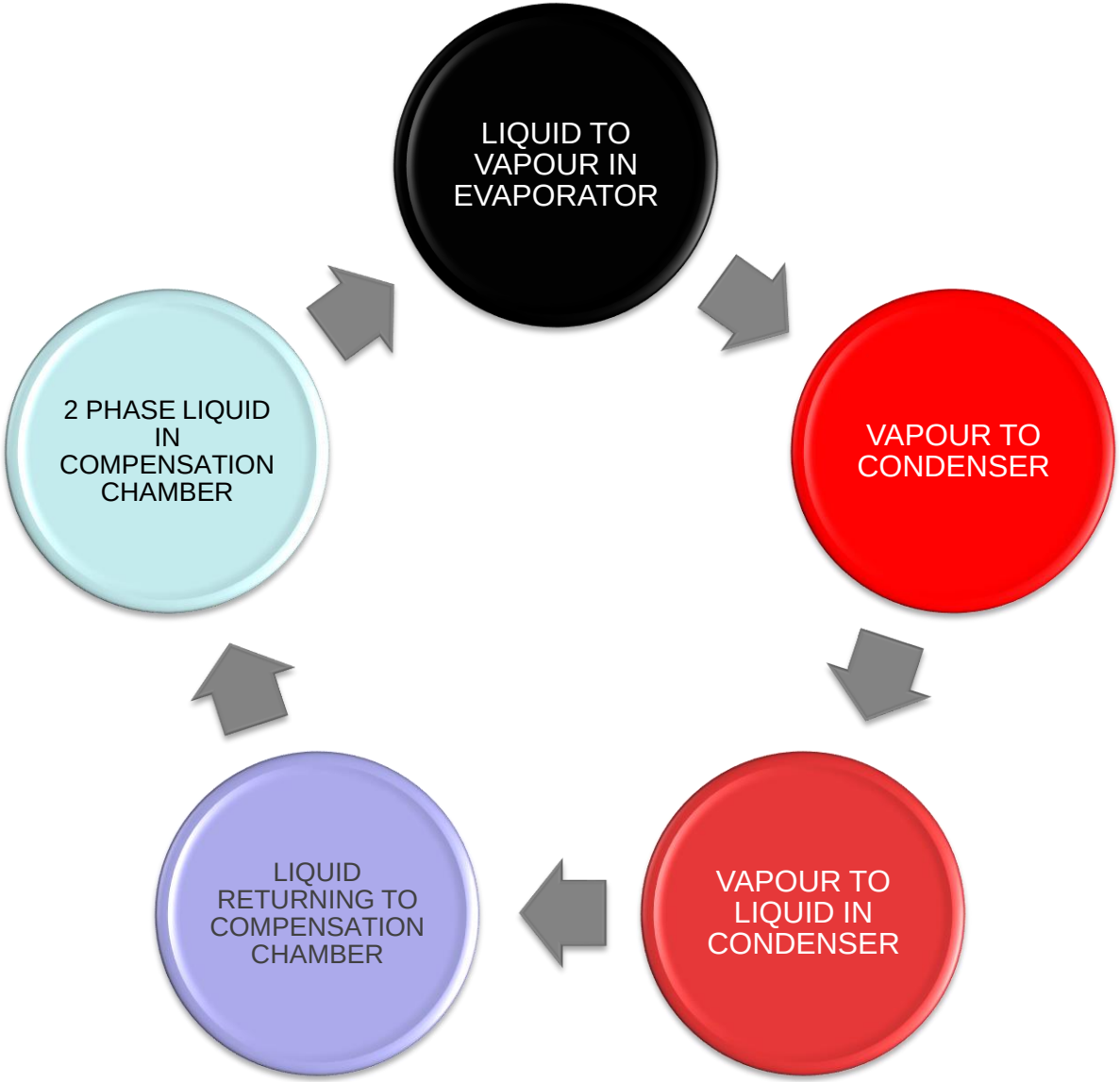

Start-up Behaviour

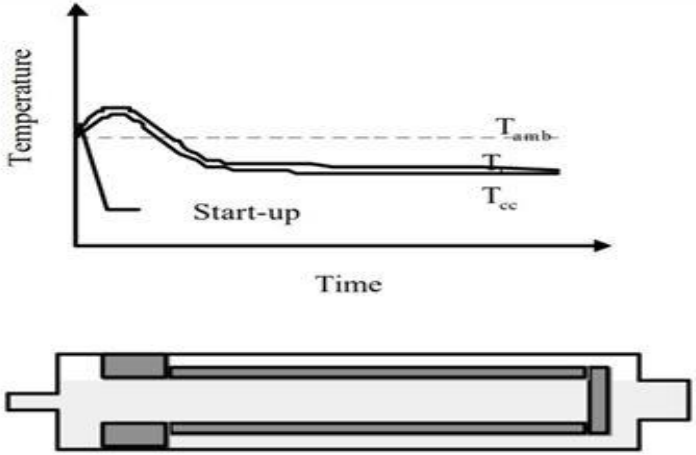

(a) Situation 1

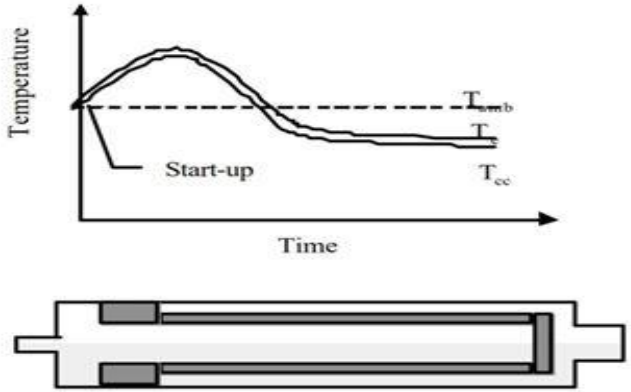

(b) Situation 2

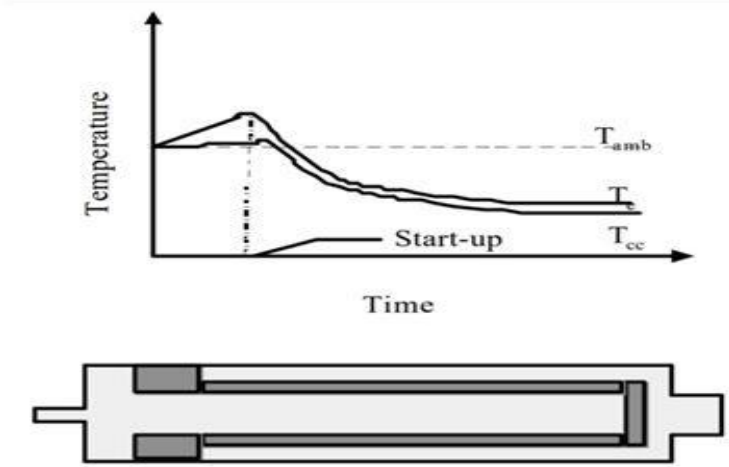

(c) Situation 3

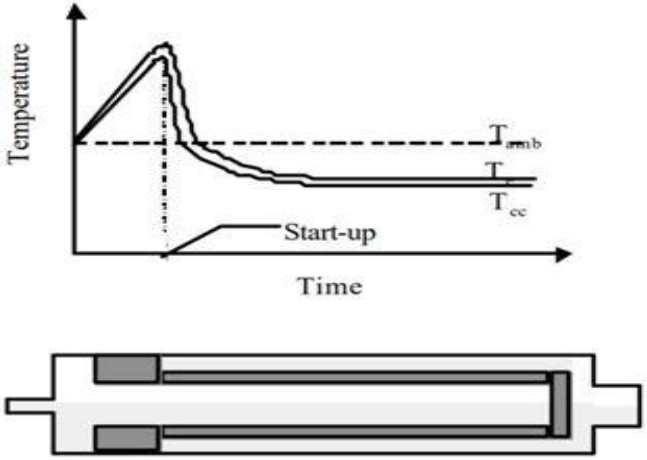

(d) Situation 4

Heart of LHP

- **The capillary wick** is the key component of loop heat pipe (LHP), as it organizes the heat and mass transfer in the evaporator and circulation of the working fluid around the loop utilizing its “inverted menisci” structure and the capillary force developed in the fine pores. The property of capillary wicks is characterized by **porosity**, **permeability** and the **pore radius** and **structure**.
- There are two types of wicks in LHP
  - Primary Wick
  - Secondary Wick

Activities of Primary Wick

- To absorb working fluid from the secondary wick.
- To transfer water to vapour grove zone for evaporation process.
- Phase change of fluid takes place at primary wick.
- It should Isolate CC with evaporation zone.
- It should make heat leaks to compensation chamber low or zero.

Activities of Secondary Wick

- An important component of the LHP in microgravity applications is the Secondary wick. It serves a number of purposes:
  - Ensures that the primary wick stays wet during heat load transients.
  - Under steady state, it iso-thermalizes the core of the evaporator and the compensation chamber by a mechanism analogous to LHP action.
  - In terrestrial applications it ensures the wick is wetted when the LHP evaporator has an adverse tilt (i.e. evaporator above compensation chamber).

Advantages of LHP

- Of all the systems working between the same temperatures LHP's give highest efficiency & effectiveness.
- They need no power input for working and also work continuously once installed as it is self-priming.
- It had a better scope for future use than all other cooling systems available.
- Safer to use in any environment and can work for longer time.
- Low or nil maintenance cost is required and also operates without any noise.
- Scope of development and market demand is high (which helps many research opportunities on LHP).

Traditional Manufacturing

Sintering

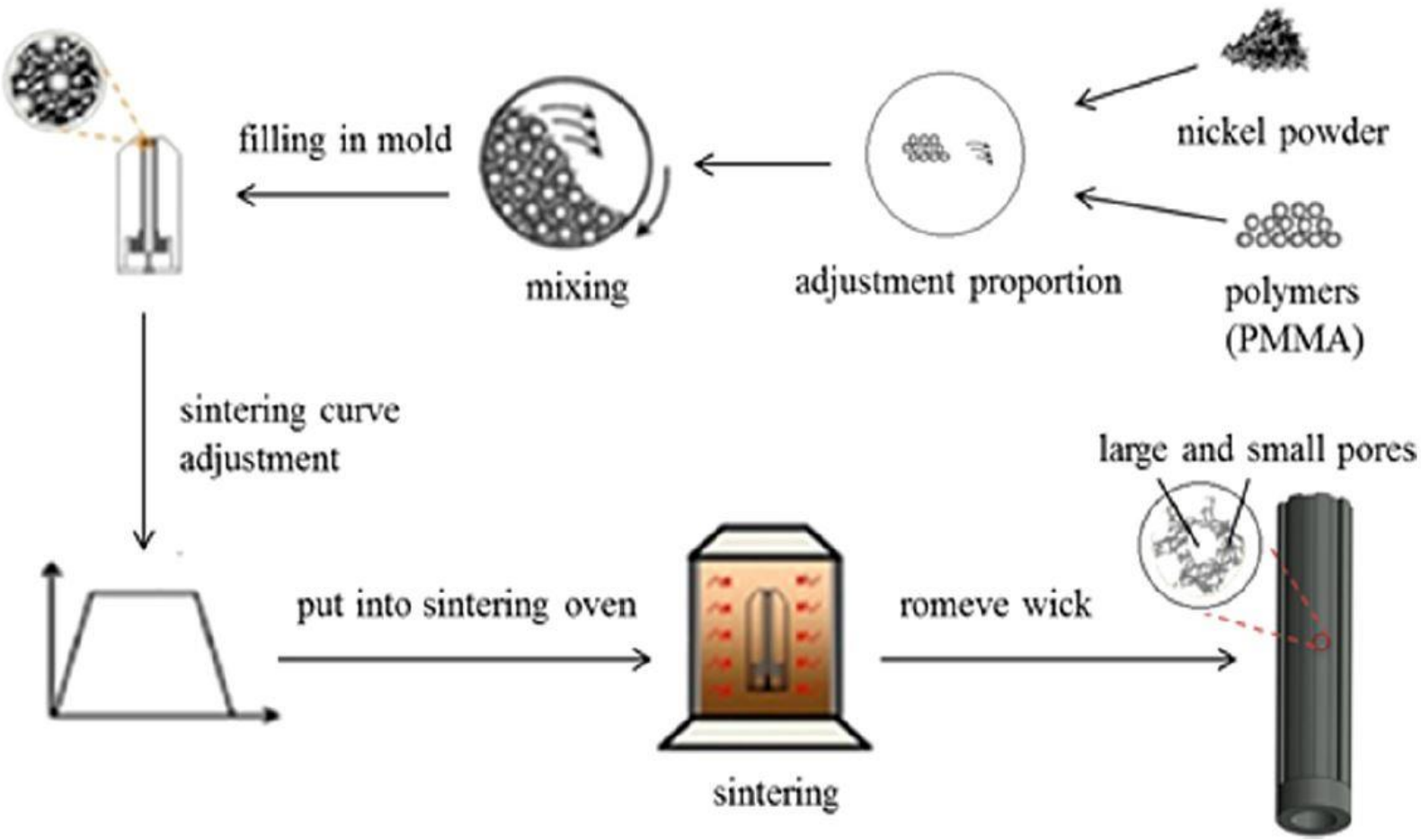
filling in mold
mixing
adjustment proportion
nickel powder
polymers
(PMMA)
sintering curve
adjustment
large and small pores
put into sintering oven
romeve wick
sintering

Micro Drilling

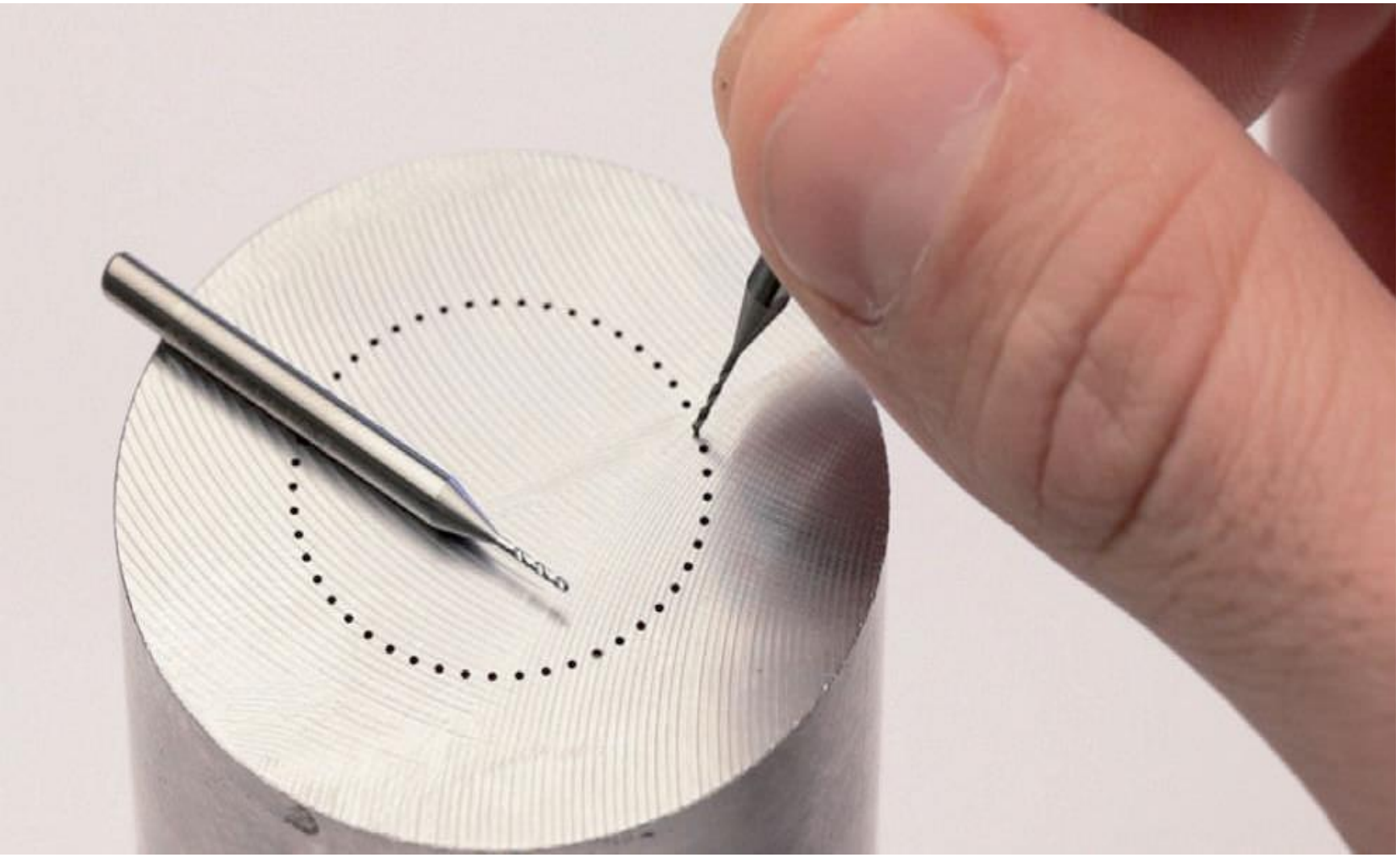

Disadvantages of traditional production

- Sintering presents the drawback of generating a random internal structure which promotes heterogeneity in the fluid-thermal behavior of the wick.
- Manufacturing time is more.
- In Micro drilling the drill bits may be overheated.
- Cost of manufacturing for sintering is high when it comes for mass production and job production too.

Disadvantages of traditional production

- Wick design is not in the control of the user.
- Quality of the pores is less that give low permeability for sintered wicks (i.e., less than required).
- Number of people required for production is also high.
- It is dependant production which may delay the overall process

So there is need of new method of manufacturing which can replace the traditional manufacturing of Wicks

Additive Manufacturing

ADDITIVE MANUFACTURING

- **Additive Manufacturing** (**AM**) is an appropriate name to describe the technologies that build 3D objects by **adding** layer-upon-layer of material, whether the material is plastic, metal, concrete or one-day human tissue.
- Once a CAD sketch is produced, the AM equipment reads in data from the CAD file and lays downs or adds successive layers of liquid, powder, sheet material, in a layer-by-layer fashion to fabricate a 3D object.

Types of AM Process

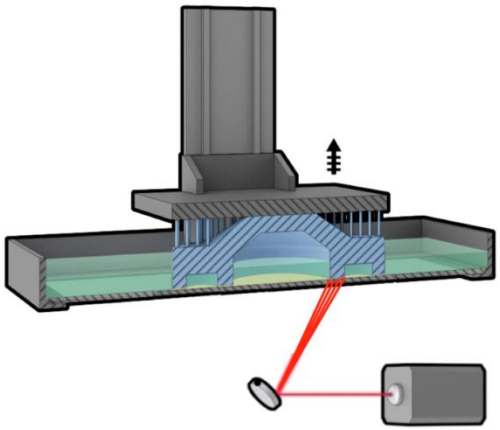

Stereolithography process

SLA Parts

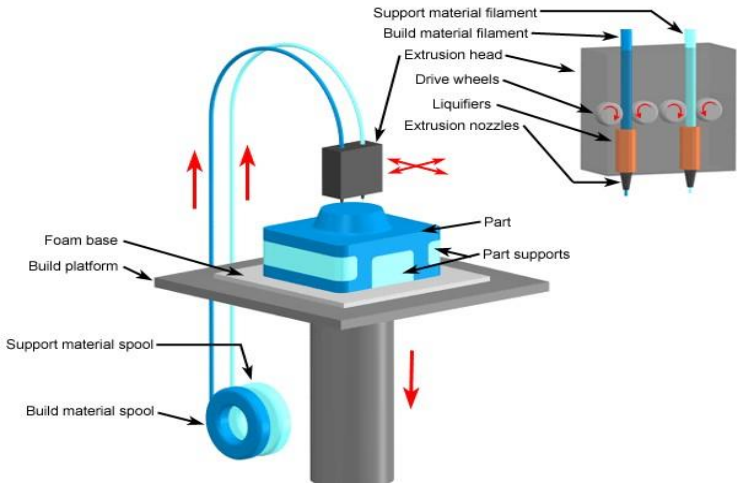

Fused Deposit Machining

FDM Parts

Types of AM Process

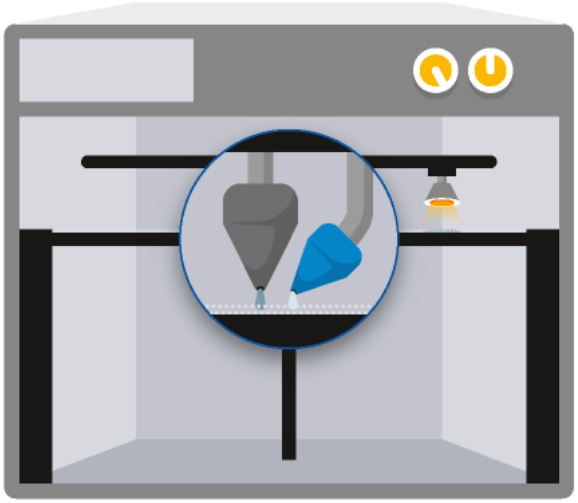

Multi Jet Fusion

MJT Parts

Digital light Processing: For 3D printing, both DLP and SLA functions with photopolymers. However, the difference between SLA and DLP technology is that DLP requires an additional source of lighting. The substance used for printing is a liquid plastic resin that's set in a transparent resin container.

Types of AM Process

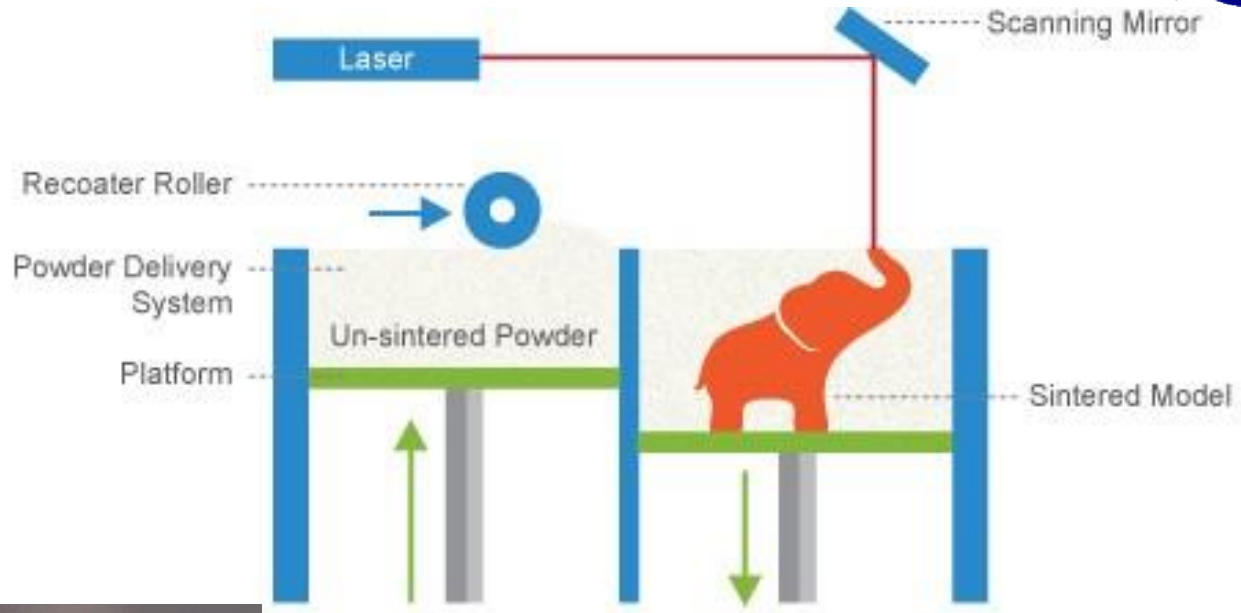

Selective Laser Melting/Sintering Process

SLM Part

Advantage of using SLM for LHP manufacturing

- A distinct advantage of the SLM process is that because it is fully self-supporting, it allows for parts to be built within other parts in a process called **Nesting** – with highly complex geometry.
- Parts possess high strength and stiffness with various finishing possibilities.
- Good chemical resistance, bio compatible according to ENISO 10993-1, USP/level-VI/394K.

Advantage of using SLM for LHP manufacturing

- Fastest additive manufacturing process for printing functional, durable, prototypes or end user parts.
- Vast variety of materials and characteristics of Strength, durability, and functionality.
- Due to the excellent mechanical properties the material is often used to substitute typical injection molding plastics.

NEW DESIGN METHODOLOGY

Design Methodology

- Design was aimed to increase the permeability of primary and secondary wicks by controlling its porosity & pore diameter.
- Traditional production doesn’t have that feasibility for the improvement in this way which actually plays a major role in LHP performance, efficiency and effectiveness.
- The new design was made to overcome this particular disadvantage which helps in the development of user controllable wicks with internal structure of the wick can be altered based on our requirement.

Design Methodology

- Production of this particular new design is only possible with AM. So, the wicks were first designed based on the general process based on the LHP analysis. Then they were redesigned to make it compatible with the SLM production without losing their actual properties for which they have to serve in LHP assembly.

Analysis

- Computational Fluid Dynamic (CFD) Analysis was done in ANSYS 19.2 research licensed version in Indo American Artificial Heart Project (IAAHP) Lab.
- HP Z8 Workstation with 6TB hard Disk and 512GB RAM was used for running ANSYS 19.2 research license version with unlimited nodes which is used only for CFD analysis.

LHP Material and Working Fluid Combinations

CASE MATERIAL	WICK	WORKING FLUID
Stainless Steel	Nickel	Water, Ammonia, Acetone, Pentane, Freon-152 A, Freon11, Propylene, Methanol
Stainless Steel	Titanium	Water, Ammonia, Acetone, Pentane, Freon-152 A, Toluene, Methanol
Stainless Steel	Stainless Steel	Ammonia
Nickel	Titanium	Ammonia
Nickel	Nickel	Ammonia
Copper	Copper	Water

Meshing

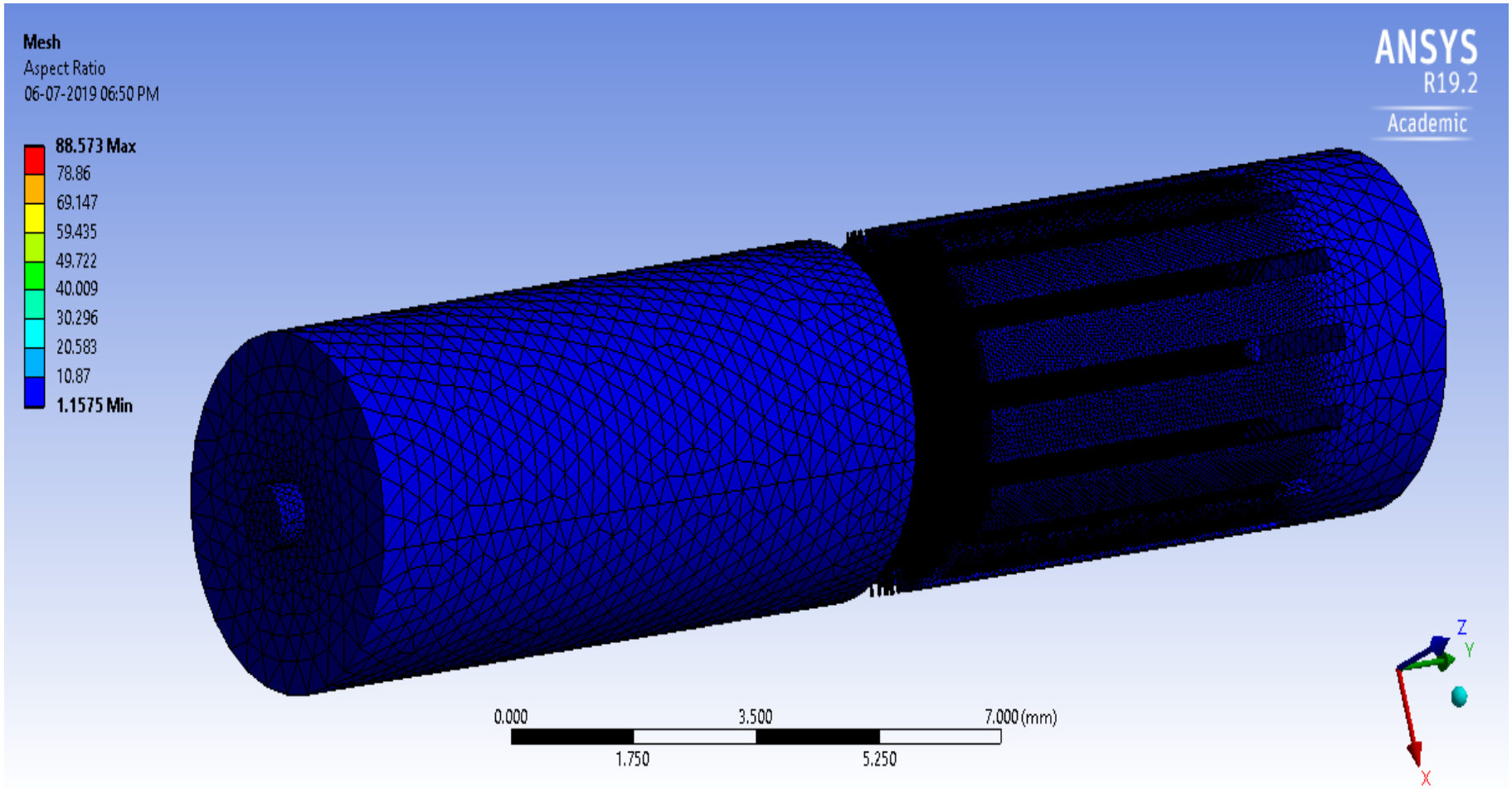

Meshing on Fluid Volume

Meshing on Primary Wick

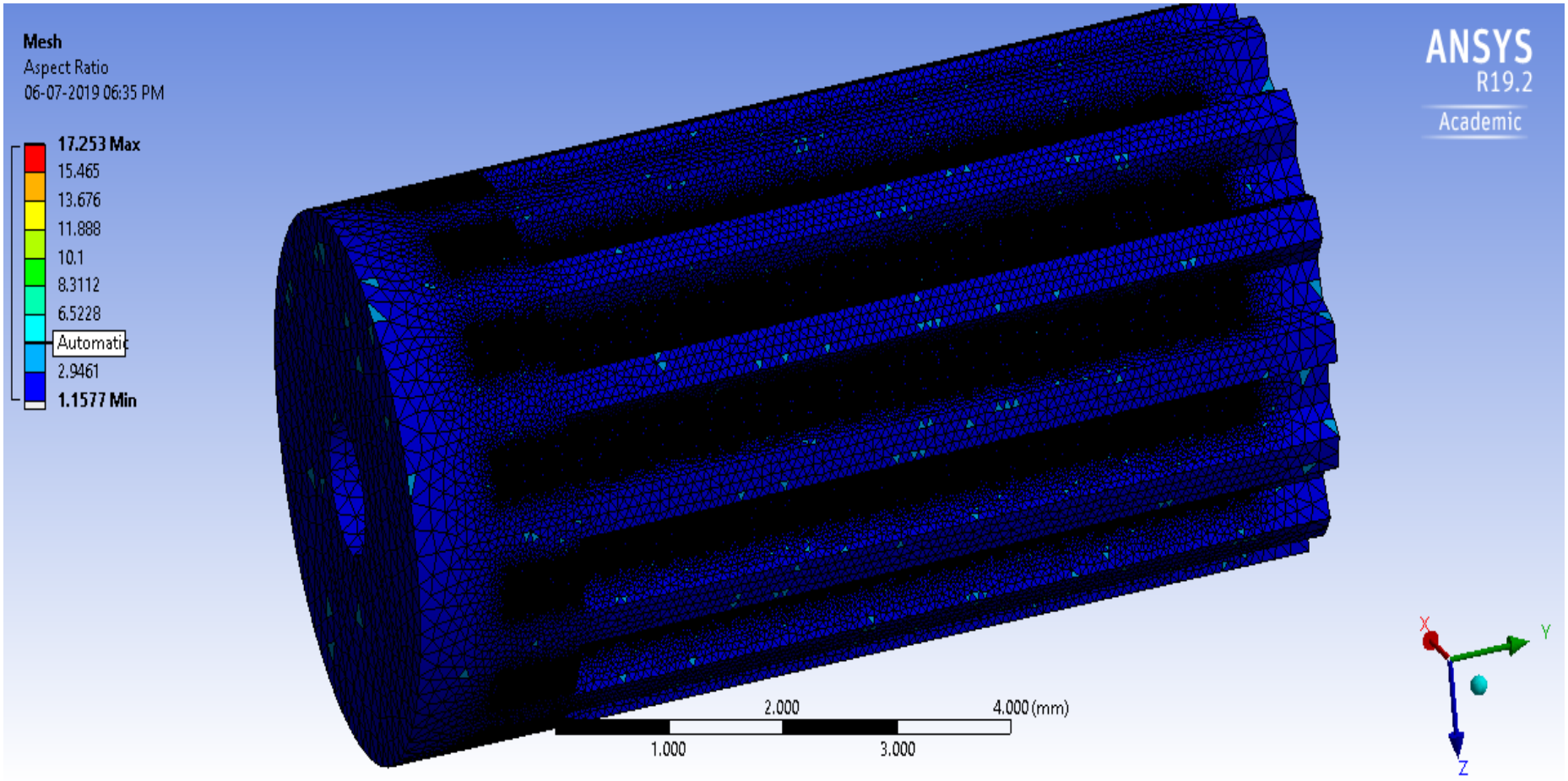

Meshing on Secondary Wick

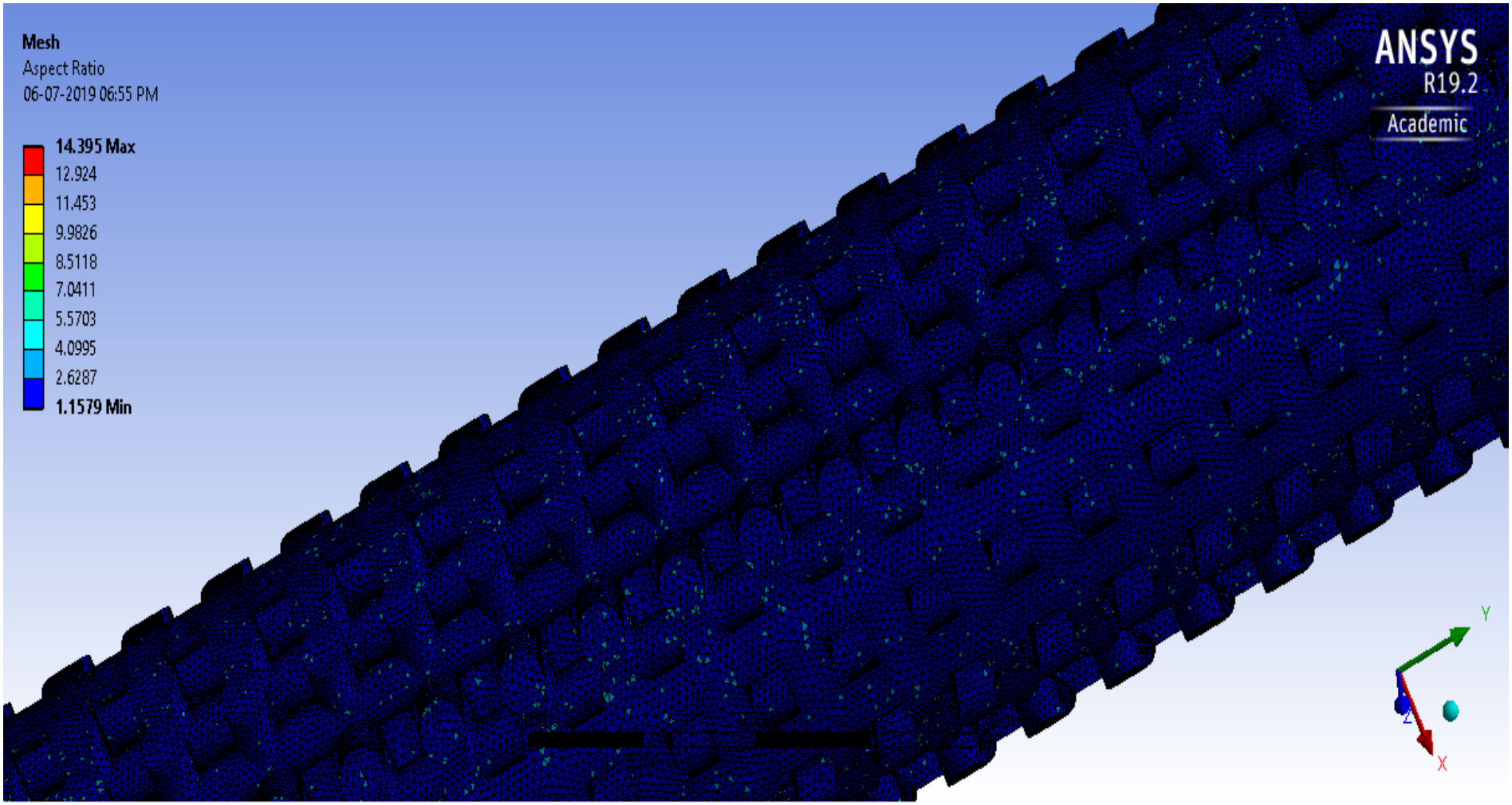

Thermal Analysis

- Thermal analysis was done to evaluate the temperature distribution in different parts of LHP.
- Results shows that there is heat leak into compensation chamber to reduce that a the primary wick was designed in such a way that it reduces the heat leak from evaporation region to Compensation chamber.
- Final thermal analysis

Thermal Analysis: Total Heat Flux

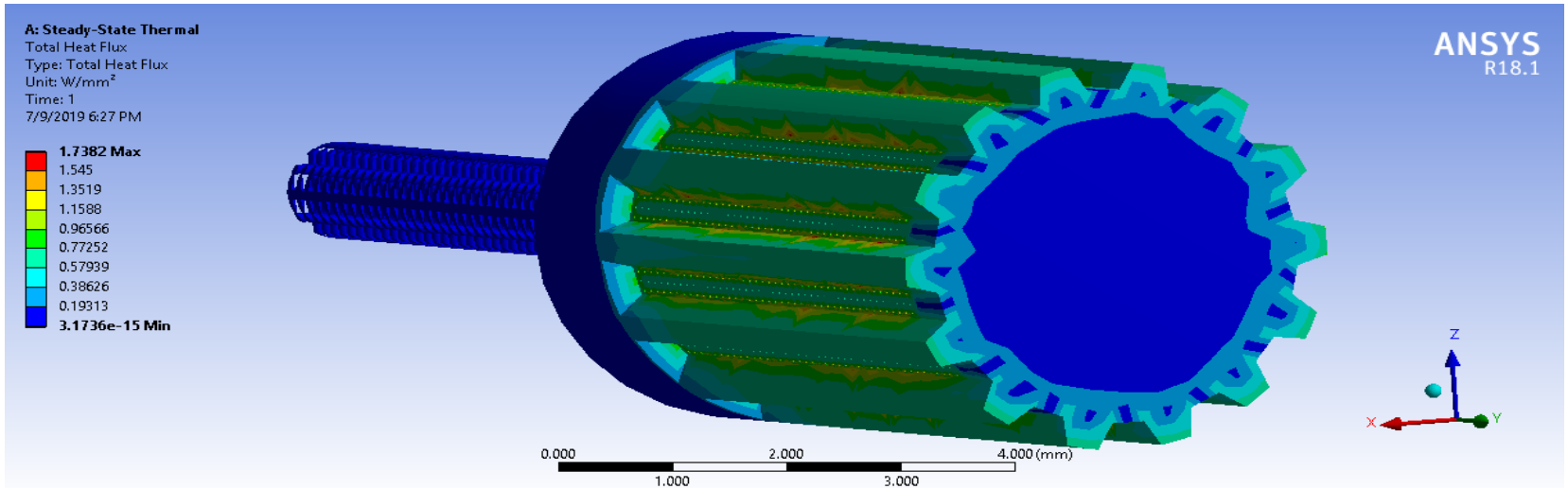

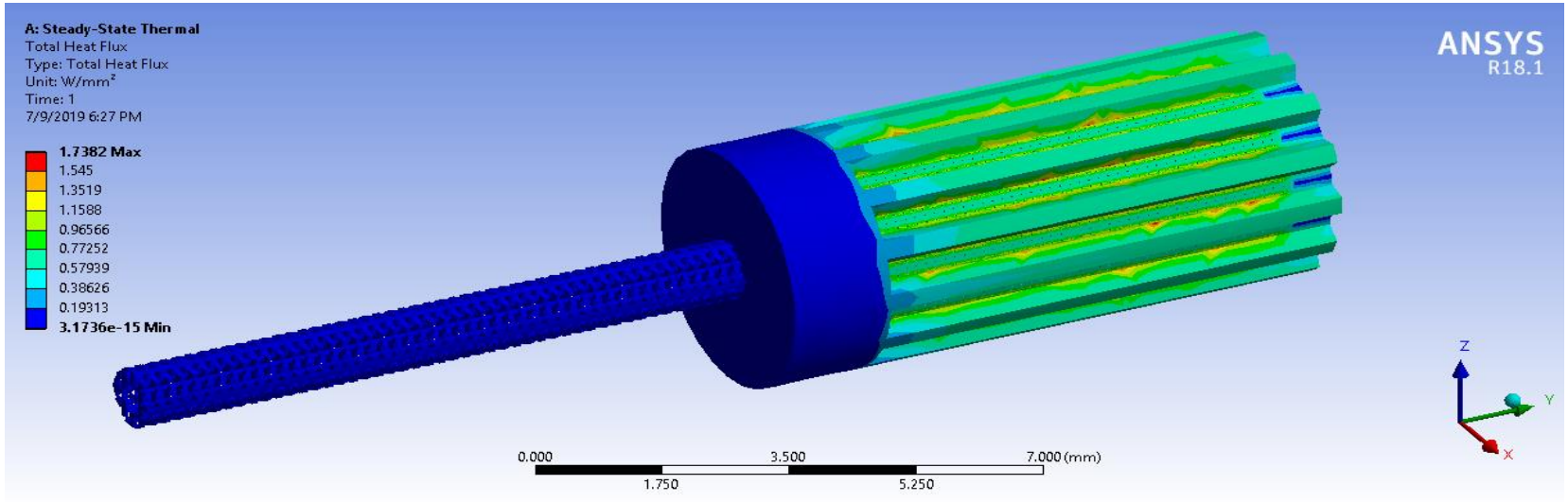

Thermal Analysis: Temperature Distribution

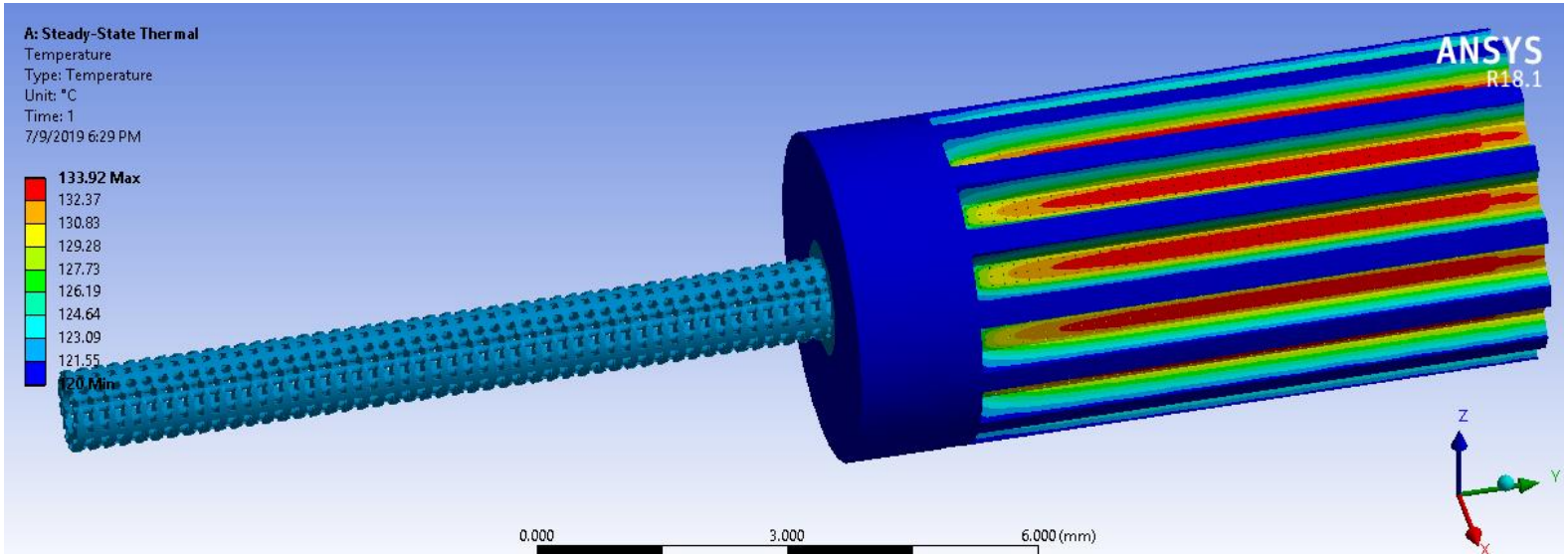

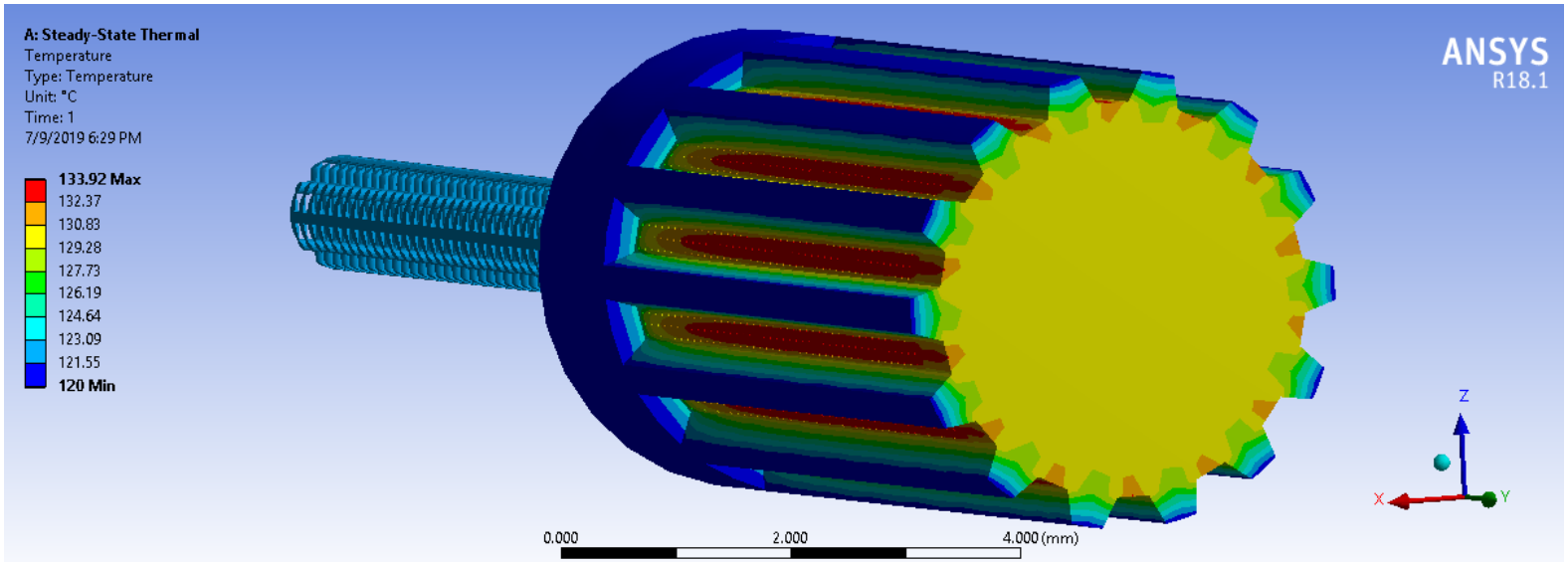

Computational Fluid Dynamic Analysis

- CFD analysis was made to study the fluid behavior and LHP performance under working conditions.
- Here the analysis is made for heat inputs of 80W, 100W and condensation is assumed to be ideal.
- Capillary pressure developed is calculated theoretically and is given as initial conditions for analysis which is X Kpa.
- The model is Multiphase and the Evaporator material is stainless steel, Wick material is Titanium, Working Fluids are Water, Acetone

CFD Contour Plot: Mass Flow Rate

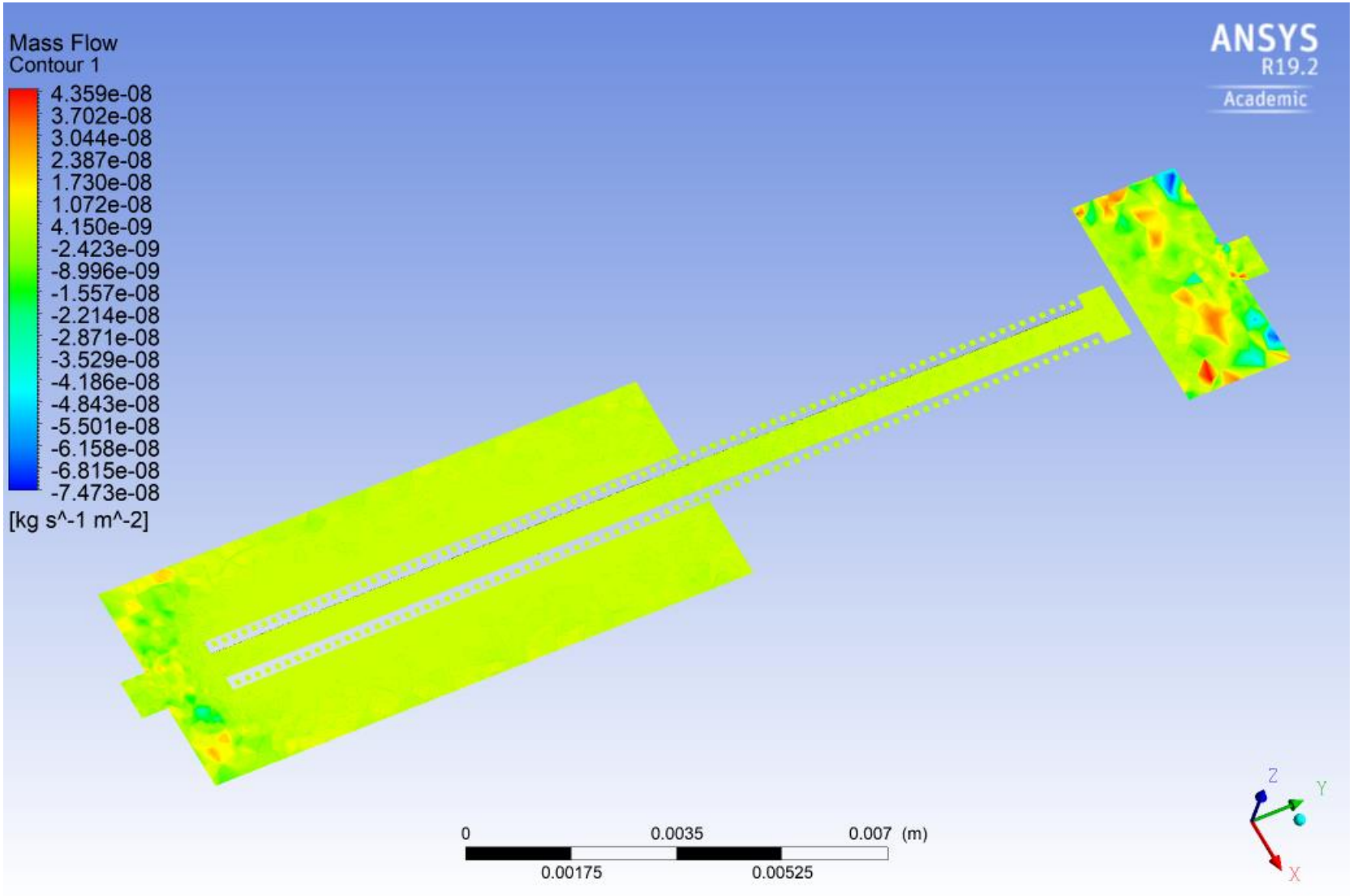

CFD Contour Plot: Fluid velocity

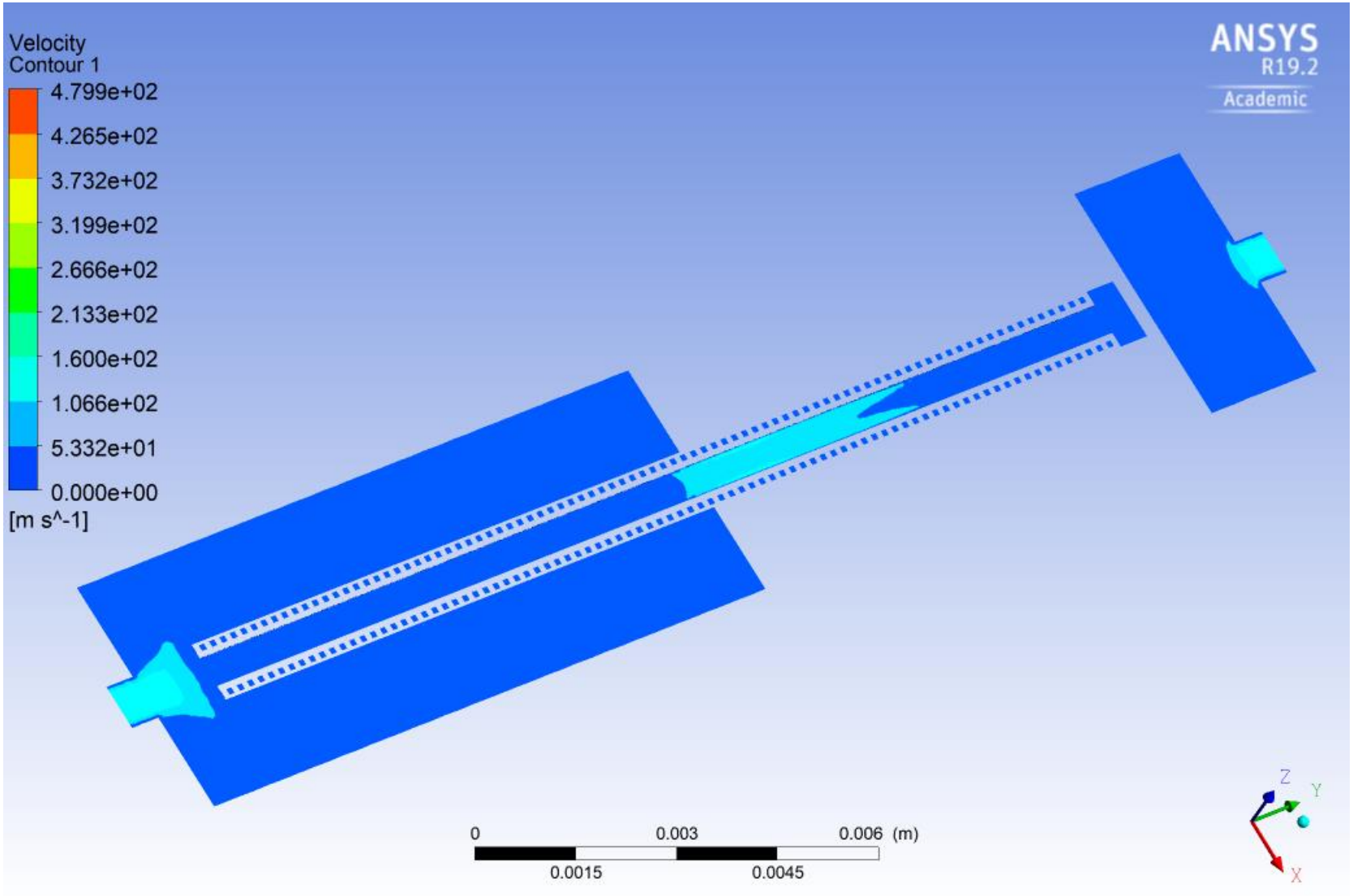

CFD Contour Plot: Temperature distribution

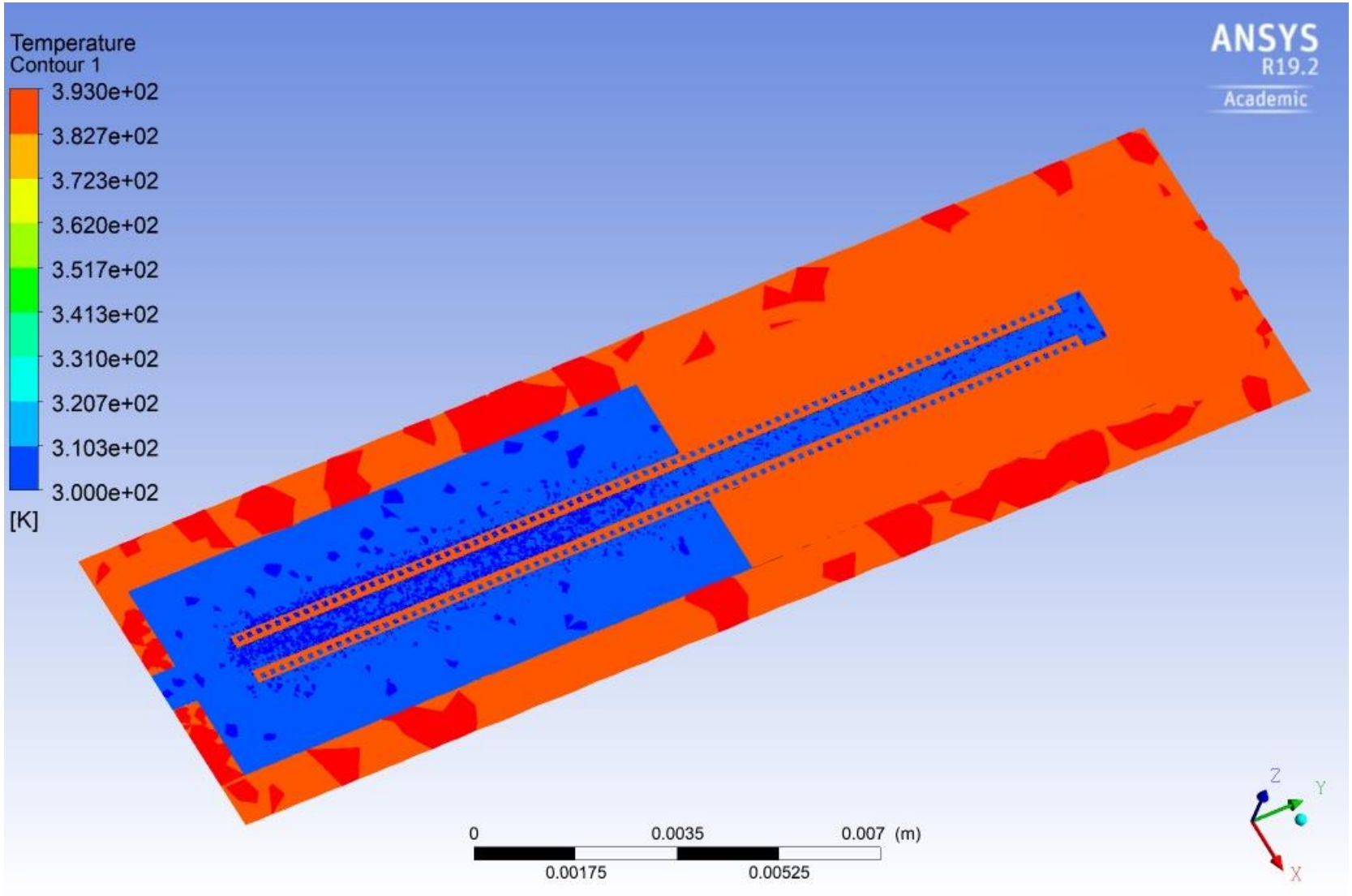

CFD Contour Plot: Temperature distribution

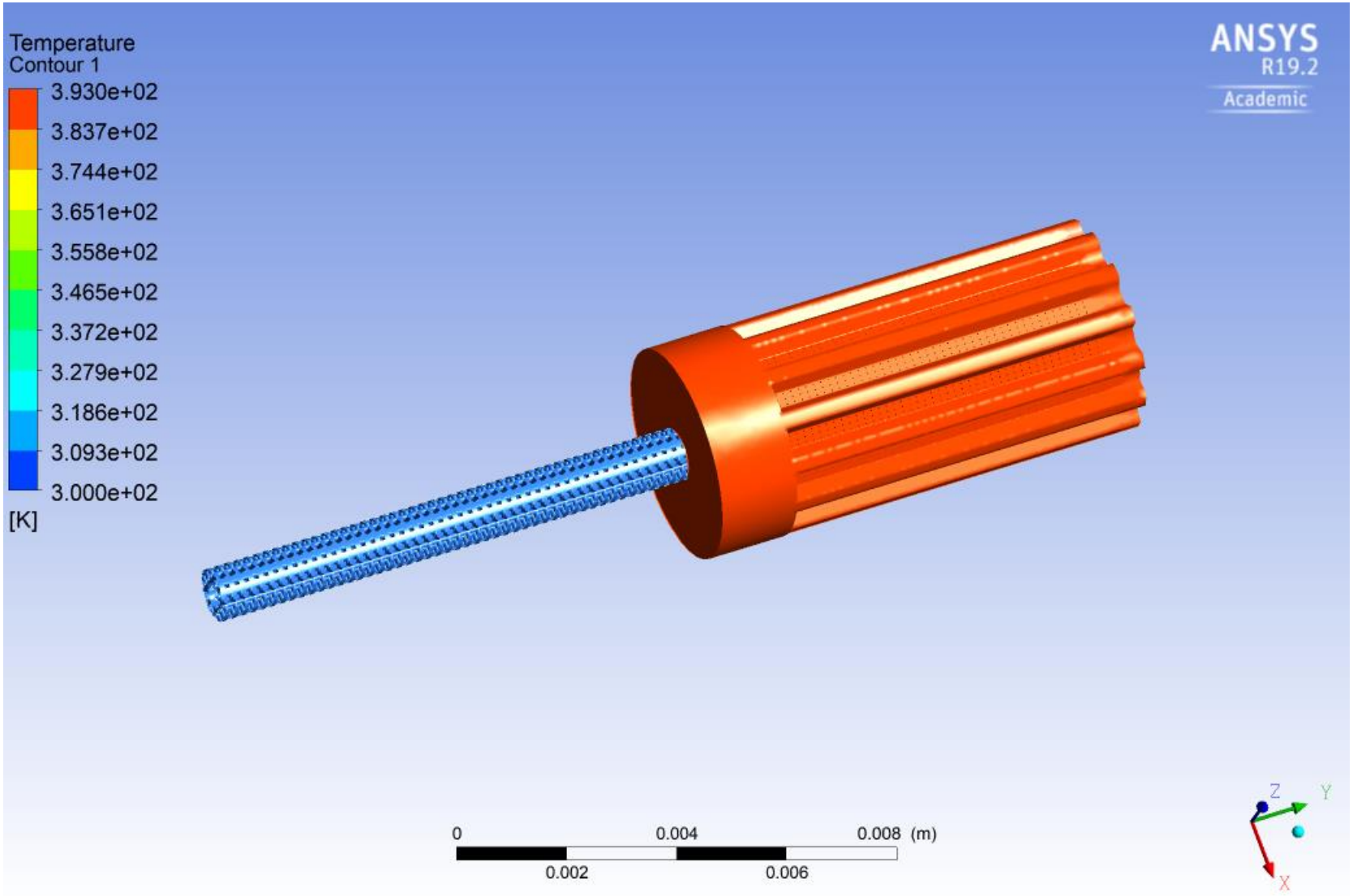

Contour Plot: Density of Fluid

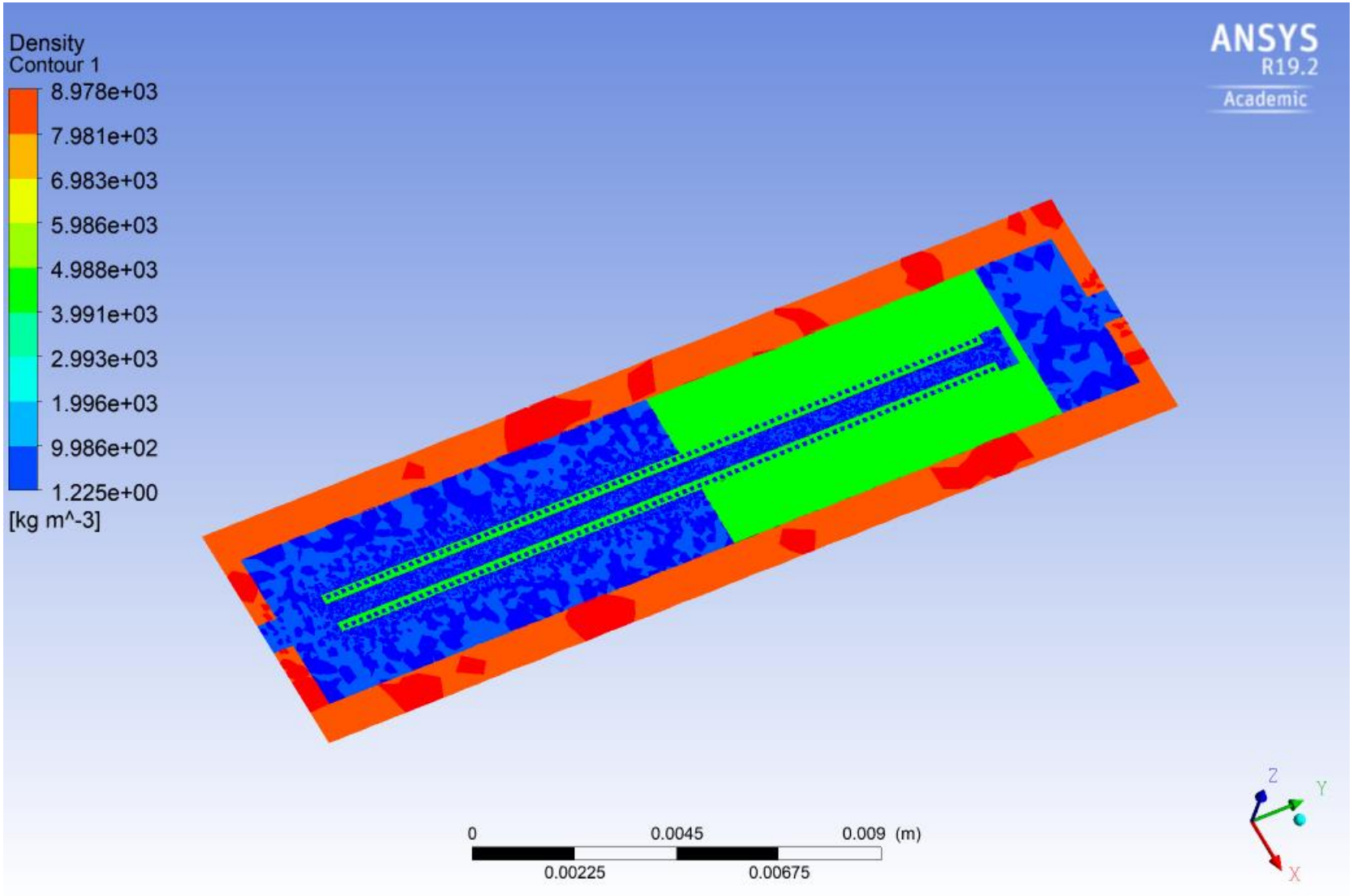

Streamlines showing Fluid Flow in Evaporator

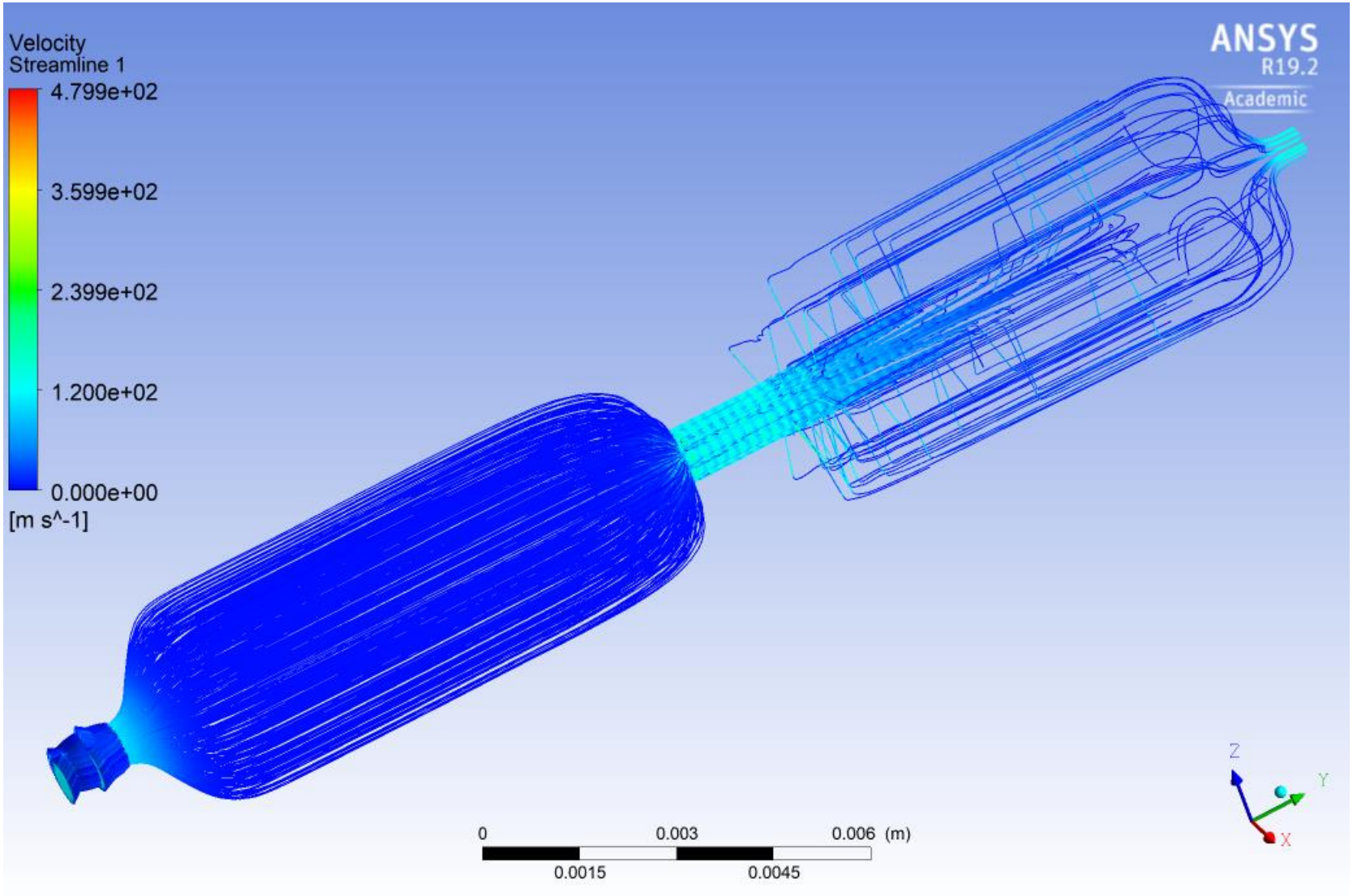

LHP Optimized Design

- From the prevalent results a final optimized design was made which can serve the desired conditions by overcoming all the difficulties raised during the previous designs and traditionally produced LHPs.

LHP Optimized Design Dimensions

S No	NAME OF THE PART	MATERIAL	DIMENSIONS
1	Primary Wick	Titanium	D_i=6, D_o=14,pore dia(d_{avg}) =0.003, L=25
2	Secondary Wick	Titanium	D_i=2.5, D_o=6, pore dia(d_{avg}) =0.01, L=36
3	Evaporator	Stainless Steel	D_i=14, D_i=16.5, L=50

***All dimensions are in mm**

Design Images

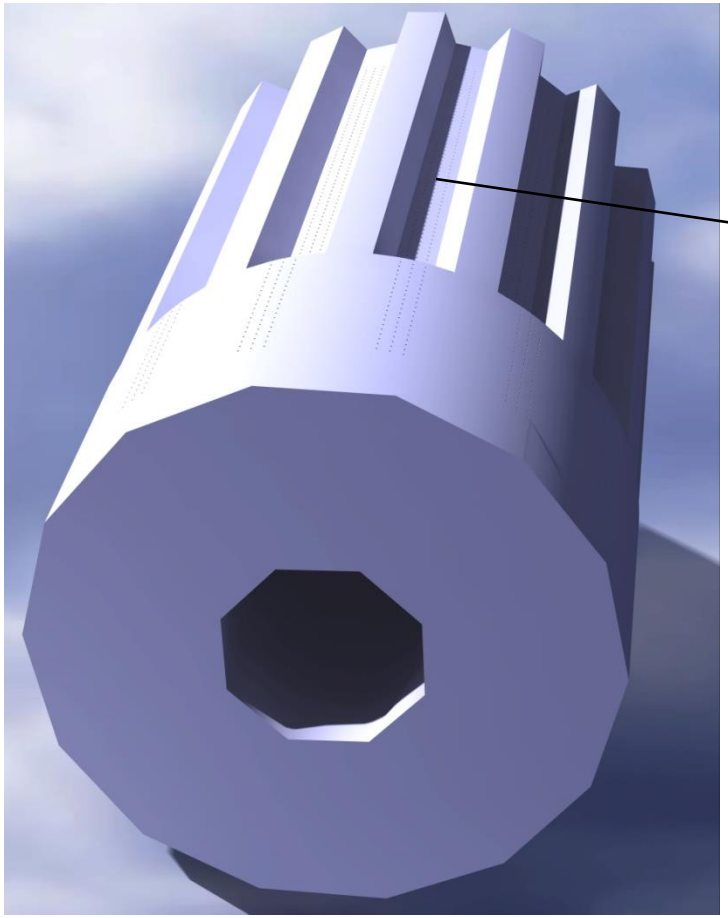

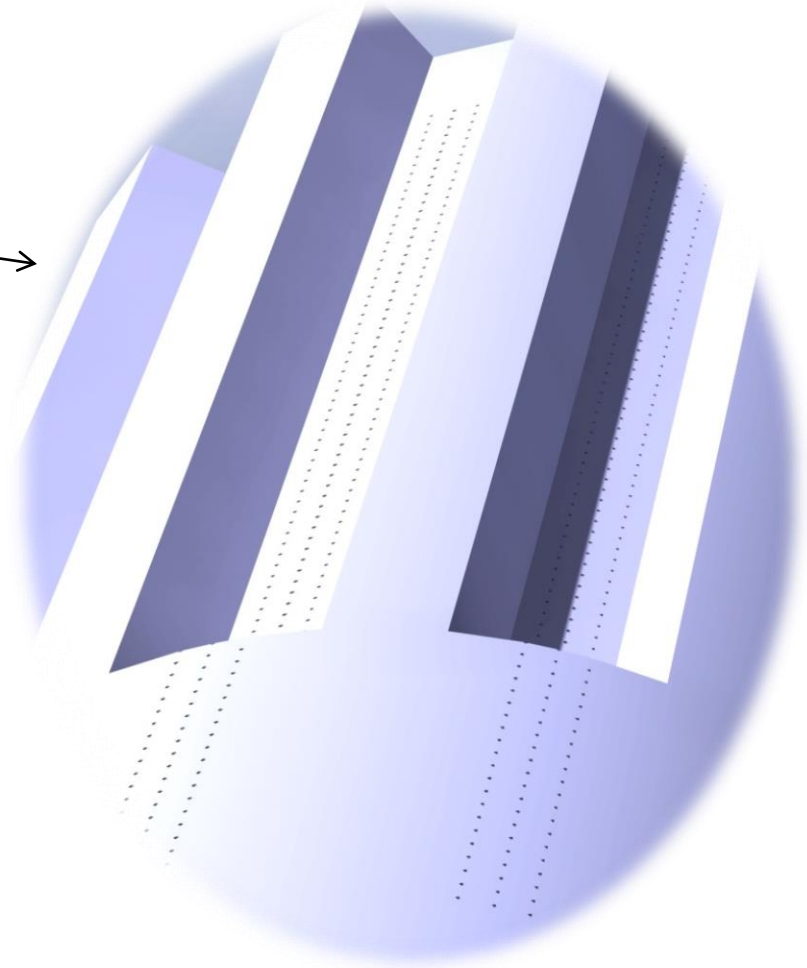

Primary Wick

Primary Wick Isometric view

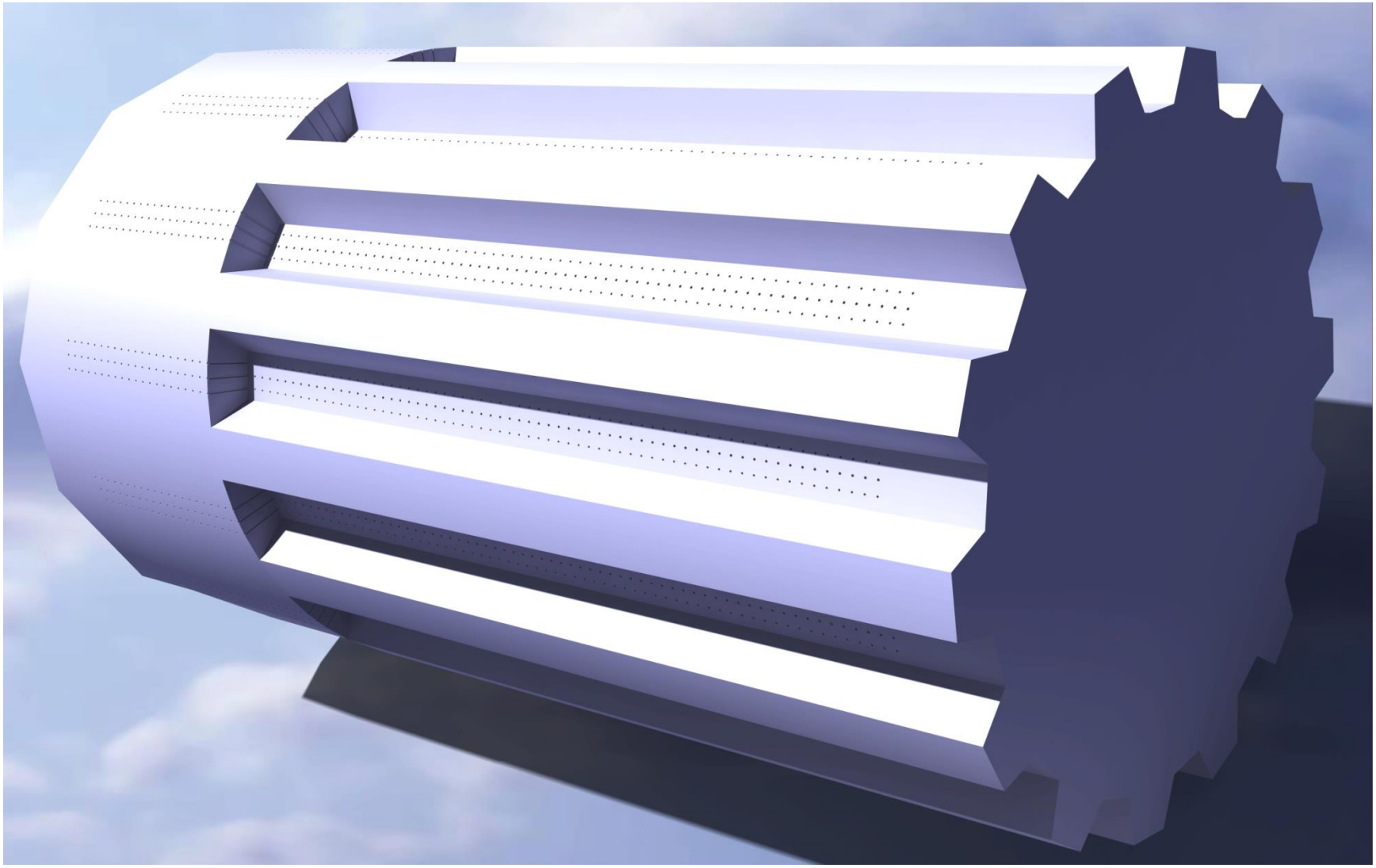

Design Images

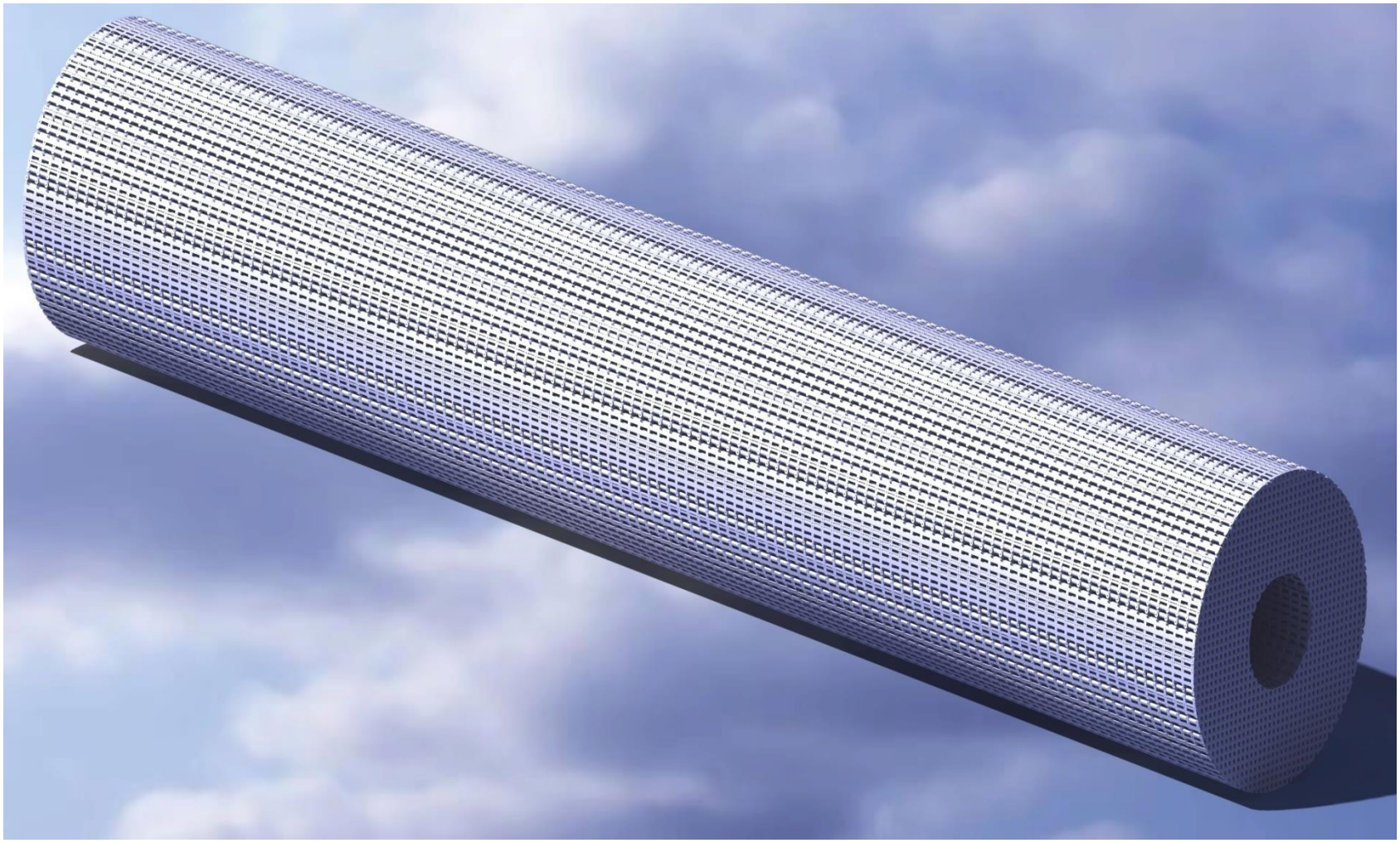

Secondary Wick

Secondary Wick Enlarged

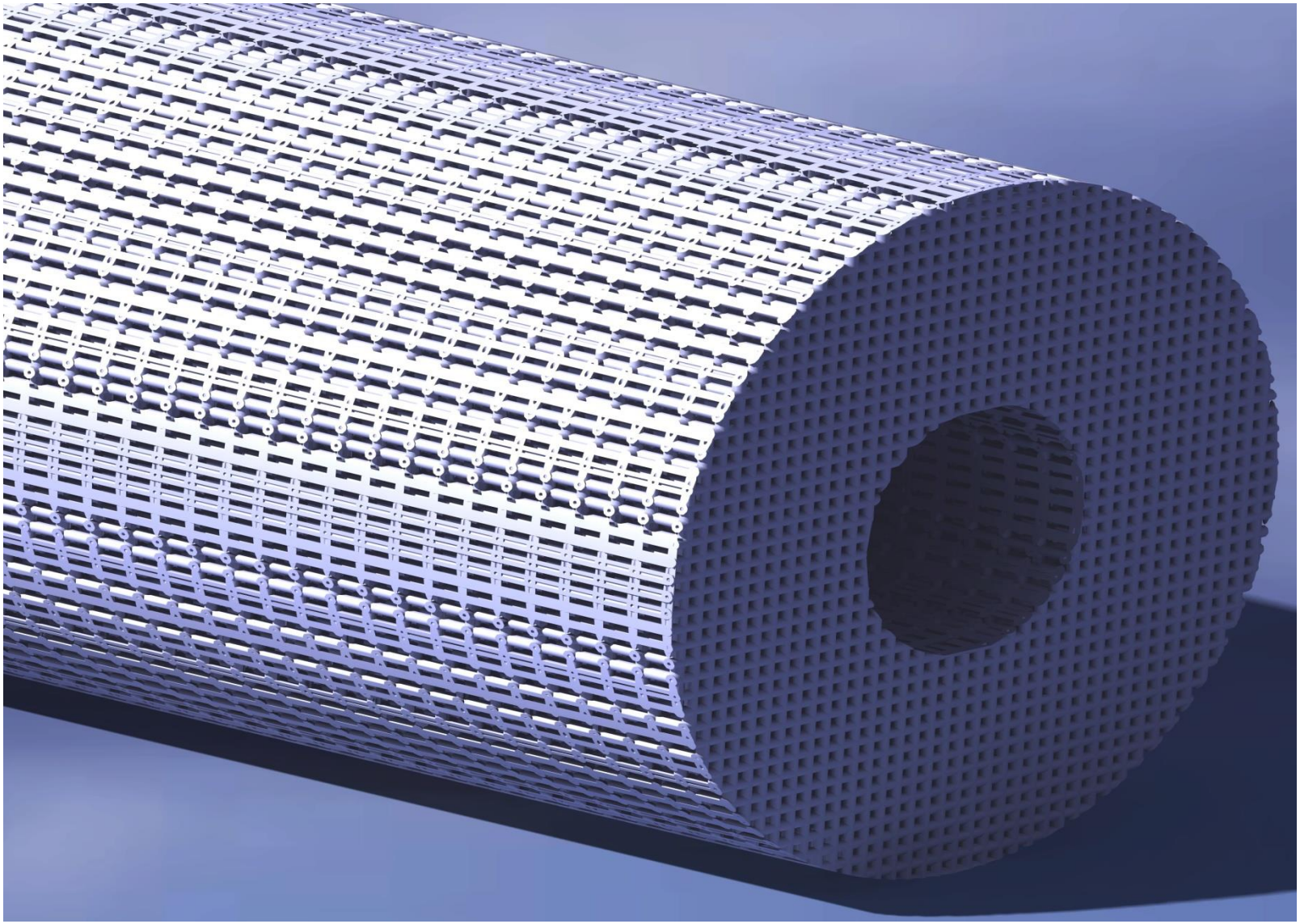

Assembly Sectional View

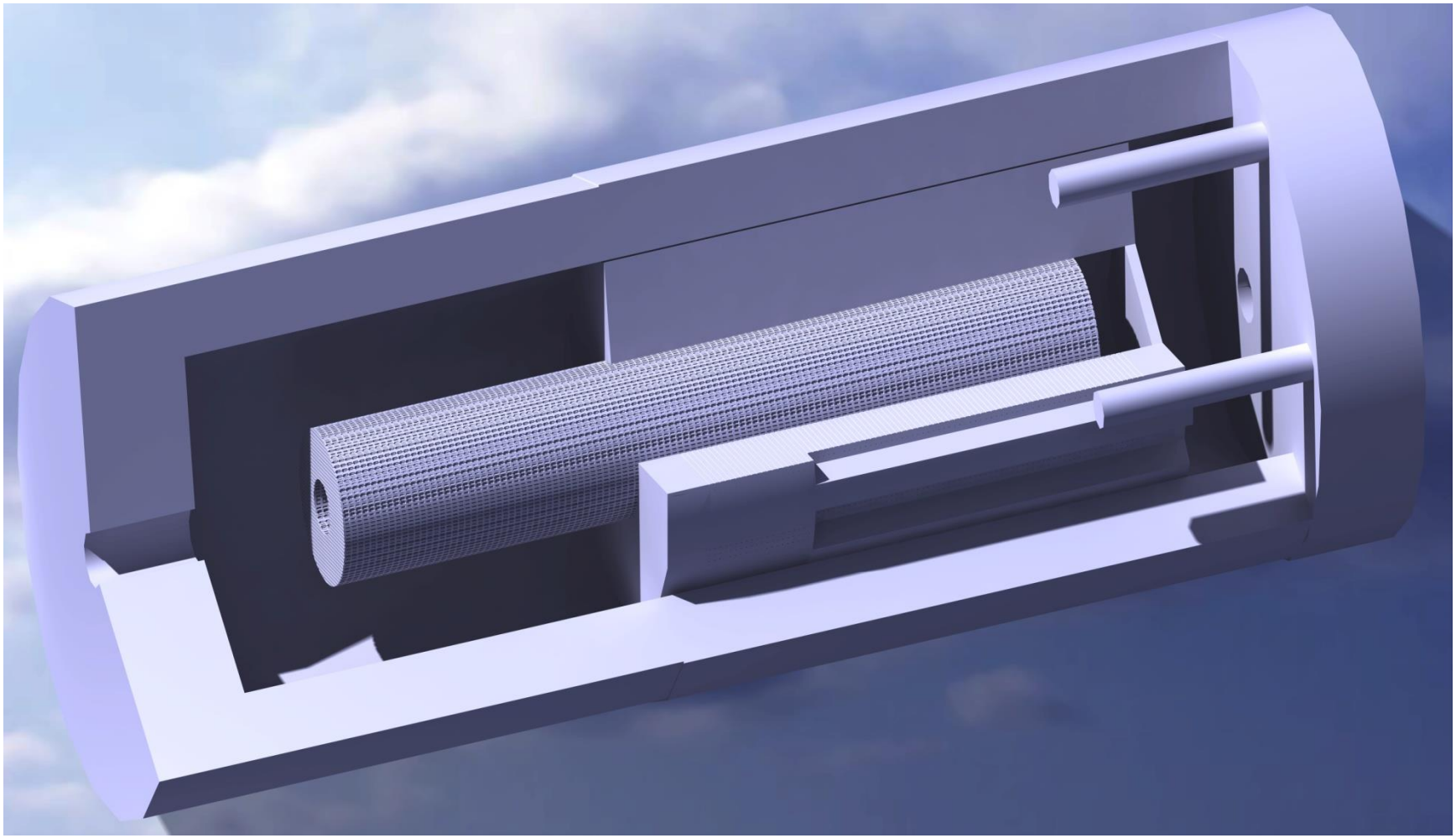

Evaporator Assembly

SLM Printed Parts

Primary Wick

Secondary Wick

Evaporator

Evaporator Assembly

Applications

- Applications to date have mostly been confined to spacecraft and aircraft, where the thermal performance benefits outweigh the cost considerations..
- Loop heat pipes are important parts of systems for cooling electronic components.
- LHPs are now commonly used in space aboard satellites including; Russian Granat, Obzor spacecraft, Boeing's (Hughes) HS 702 communication satellites, Chinese FY-1C meteorological satellite, NASA's ICESat.

Applications

- In 2014, a Belgian company (www.calyos-tm.com) initiated a technology transfer to adapt the Loop Heat Pipe to non-space markets. The company is now adapting the Loop Heat Pipe for industrial applications such as automotive, railway, defense, datacenter, air conditioning...etc.,
- More recently, cryogenic LHPs for spacecraft systems have been developed. Many military satellites require an instrument, such as an infrared camera, to operate at lower temperature than the remainder of the satellite.

Conclusions

- The overall performance of LHP mainly depends on design of Evaporator & Wicks. Mathematical modelling was performed on capillary wicks for operating conditions for a given heat load. The present design has shown good results when compared with the traditionally designed and manufactured LHP, there is a better agreement between design procedure and analysis results.

Conclusions

- Thermal and CFD analysis results showed that the model can be used as a better device for future LHP design. Final design optimization was done based on these analysis results, which can serve the LHP purpose fully.
- This particular design is easy to manufacture using SLM and can overcome problems during assembling of LHP as total assembly can be produced as a single product.

Future Work

- Experimental testing will be done to validate simulation results and theoretical results on new LHP design by manufacturing with SLM.
- A software will be developed to give out the best working LHP design for the given conditions.
- Parametric design of LHP Wicks will be developed. So that it will be easy to use for the coming generations.

Acknowledgement

- Authors are very grateful to Dr. K. Eswaraiah sir and Dr. G. Ganesh Kumar sir for providing us with Indo American Artificial Heart Project (IAAHP) lab and their support during project.

We engineers are responsible for environment safety. So, whatever the work we do should not harm the environment. Therefore, I request every one of you to save energy for future world, to protect environment and not to make any work which may harm the earth and people living on it.

Q&A

Any Questions?

Design, Thermal and Computational Fluid Dynamic Analyses on Loop Heat Pipe Wick and Manufacturing with Selective Laser Melting

Togaru Lavanith, Naganathan Karthik
Mechanical Engineering Department, Kakatiya Institute of Technology & Science, Warangal - 506015, Telangana, India.

doll143189149@gmail.com

Thermal & Fluids Analysis Workshop
TFAWS 2019
August 26-30, 2019
NASA Langley Research Center
Hampton, VA