GSFC · 2015

Temperature Measurement in the Challenging Environment of the ISS UPA Distillation Assembly Using Wireless RFID Sensors

Christopher Evans
Marshall Space Flight Center

Urine Processor Assembly (UPA)

S130E006844

- Installation of the UPA's Distillation Assembly (DA) on the International Space Station (ISS)
- Concentric spinning cylinders use centrifugal separation and vapor compression distillation to recover water from urine
- ES62 and EV34 are currently developing computational models of the UPA and its components
  - Will aid development of future exploration units
  - Need experimental measurements inside the system for correlation
  - Experiments are performed on ground test article, not ISS flight unit

Distillation Assembly Cross Section

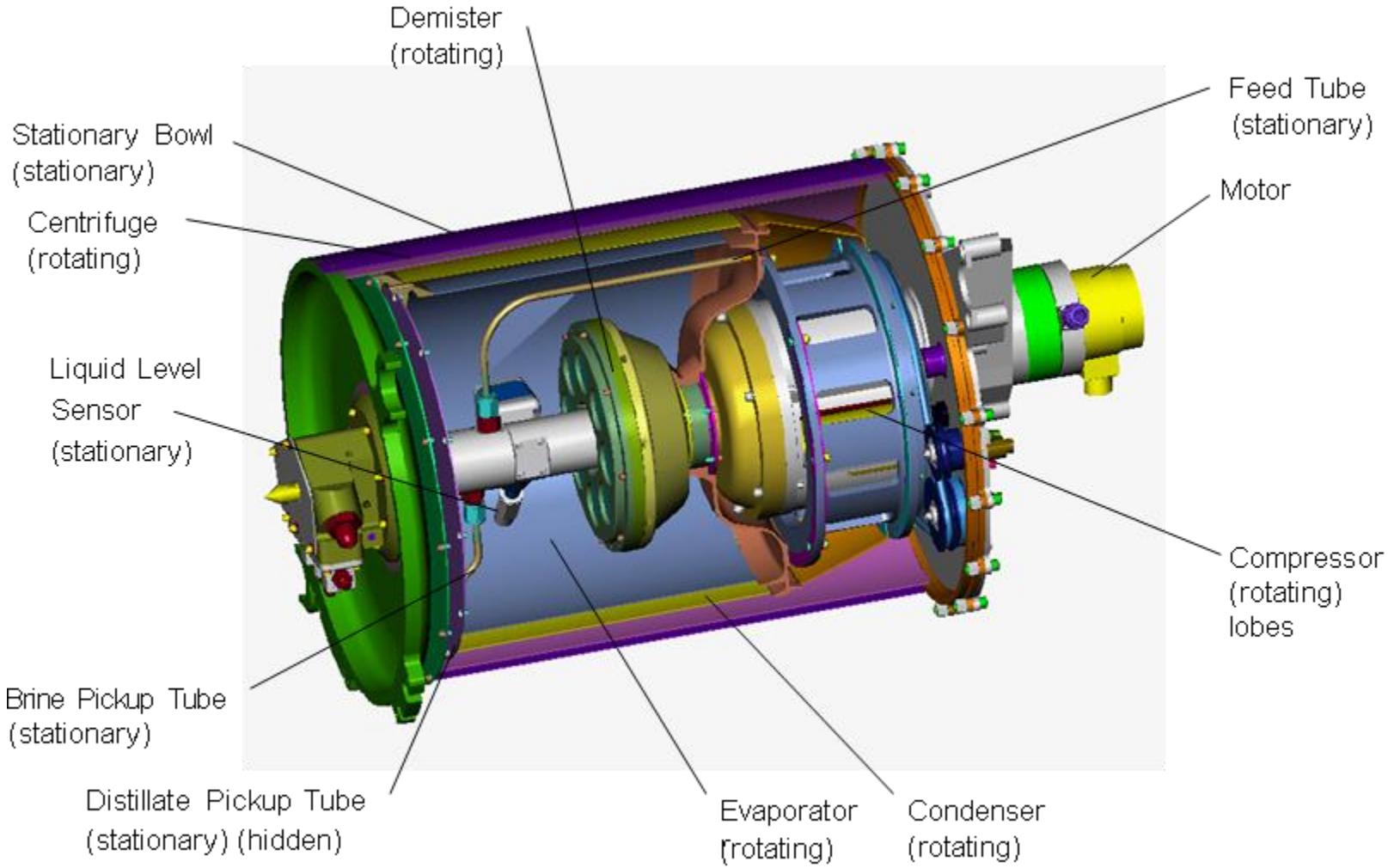

DA Measurement Challenges

- Rotating cylinders
  - Can’t run wires to rotating parts
- Metal enclosure
  - Blocks radio waves
- Corrosive liquid
  - Blocks some EM radiation
  - Destroys many materials and adhesives
  - Shorts out electronics
- Complex to disassemble/assemble

Potential Solution: RFID Tags

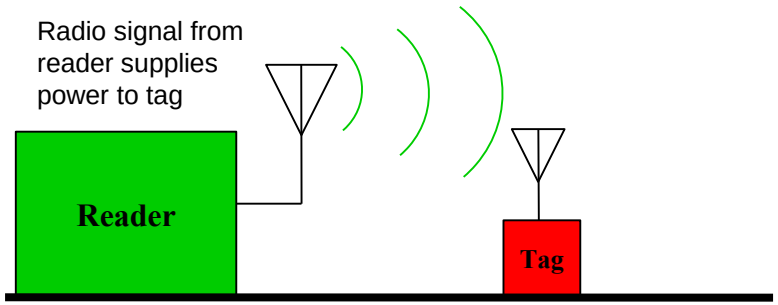

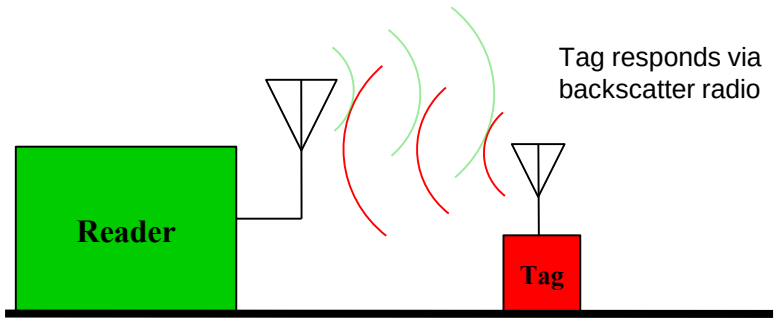

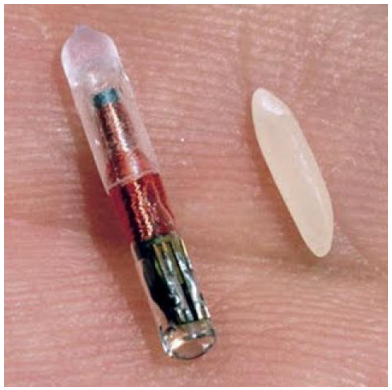

- Radio Frequency Identification
- Wireless
- "Passive" requires no battery
  - Powered by radio waves from the reader, senses and transmits information when actively read
- Compact
- Can be encapsulated for protection from harsh environments
- Can include various sensors
- Limitations
  - Short read range (a few feet)
  - Signal blocked by metal

RFID Implementation Concept

- Passive temperature sensors, antenna/readers wired to outside
- 2 antennas, 8 sensors: 4 inside evaporator, 4 outside condenser

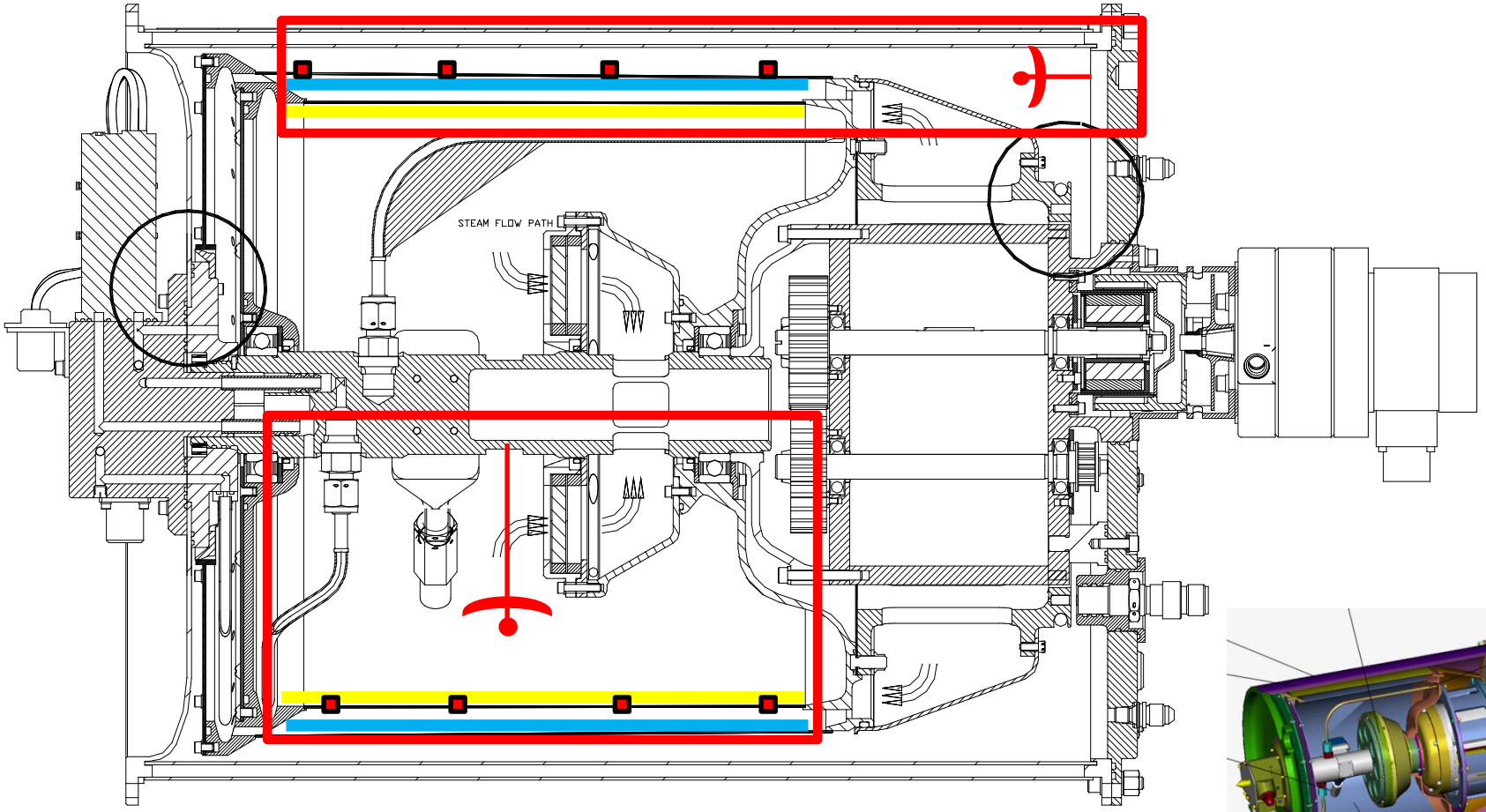

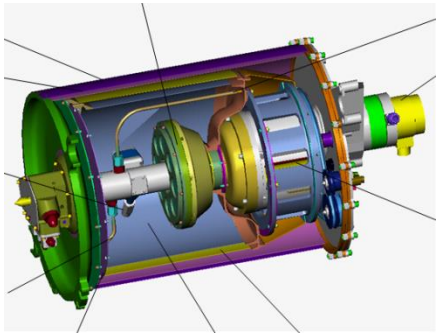

First Phase: Feasibility Study

- Test & model RFID sensor performance in DA-like conditions
  - Sensors & reader inside metal cylinder
  - Sensors along narrow passage
  - Sensors immersed in pretreated urine
- Contractor
  - Phase IV Engineering
    - Specializes in custom RFID sensors
    - Performed tests and modeling for feasibility study

Feasibility Study Results: Outer Condenser Location

- Experimental sensor read tests in between aluminum cylinders with DA dimensions

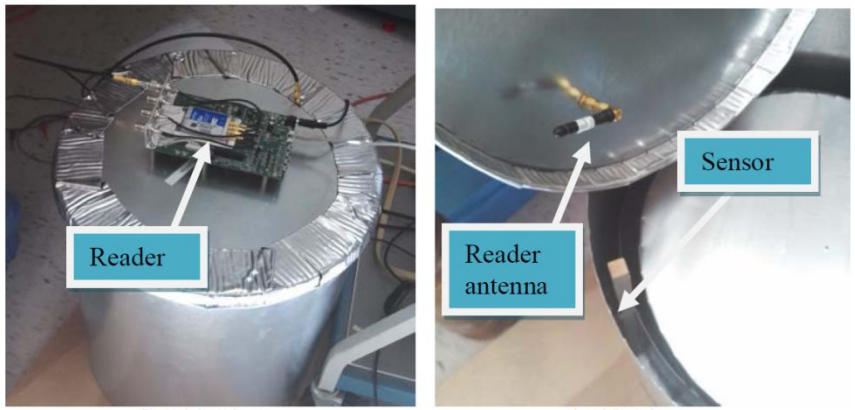

Outside view

Inside view

Image by Phase IV Engineering, Inc.

- Simulations of RF field strength in passage

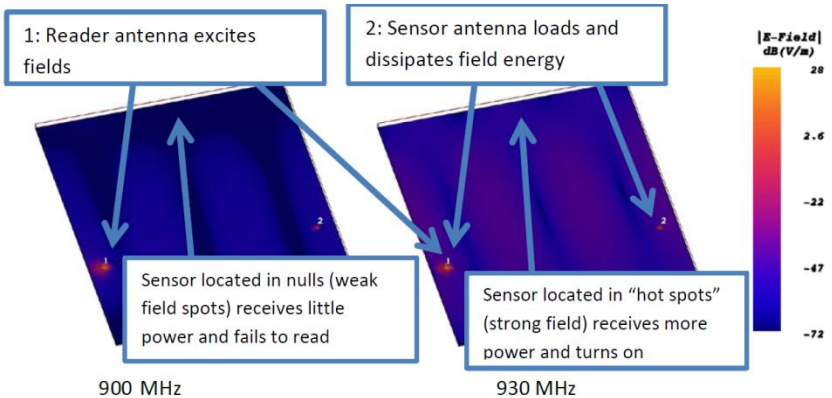

Image by Phase IV Engineering, Inc

Figure 4. Electric field intensity in a plane cut ¼" (midway through the ½" cavity) inside outer wall. As the system frequency changes and antennas reposition, the electric field intensity inside the outer wall changes.

- Tests show satisfactory field strength and read performance

Feasibility Study Results: Inner Evaporator Location

- Experimental tests of sensor reads while immersed in water and pretreated urine

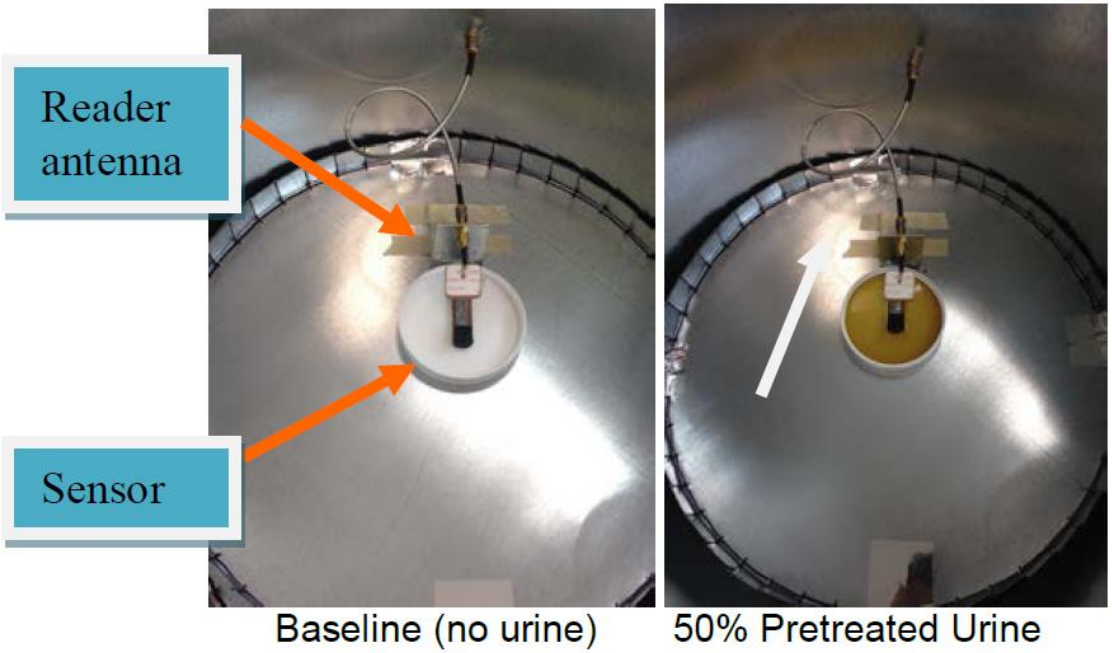

Image by Phase IV Engineering, Inc.

- Tests show even a thin liquid layer completely blocks the signal
- **Possible workaround: custom sensor with antenna raised above liquid level**
- Energy harvesting may also be an option

Installation

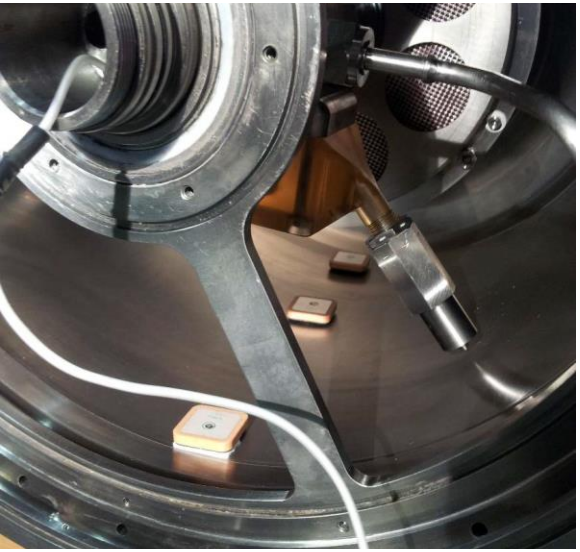

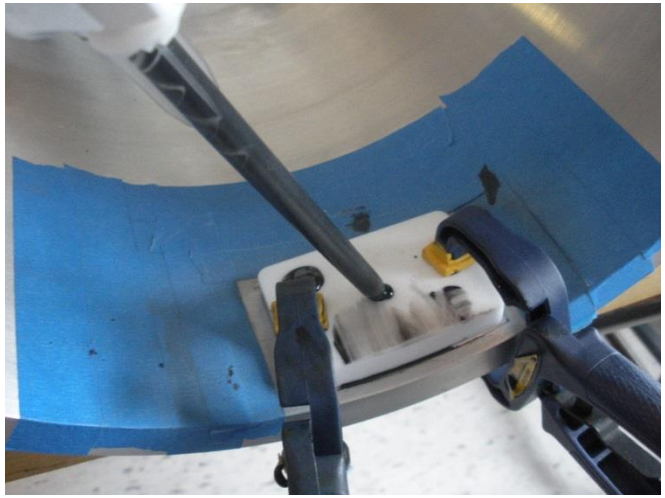

Photos by Phase IV Engineering, Inc.

- Hardware developed and installed by Phase IV Engineering
- Tags encapsulated in Duralco 4525N epoxy (inside evaporator) and Silicone Nusil EPM-2410 (outside condenser)
  - Curved to fit wall and steer fluid around the sensor
- Installation completed Oct. 2014

Preliminary Results

- Tested without fluid (dry) after installation Oct. 2014
  - Successful communication with all sensors in a dry system with spinning centrifuge
- Tested with wet system (nominal operation) early 2015
  - Confirmed communication with 7/8 sensors
  - Geometry affects performance
    - Better read rate for evaporator sensors in the center near antenna, lower rate for sensors at ends
  - Software tweaks may improve performance

Wireless Data Analysis

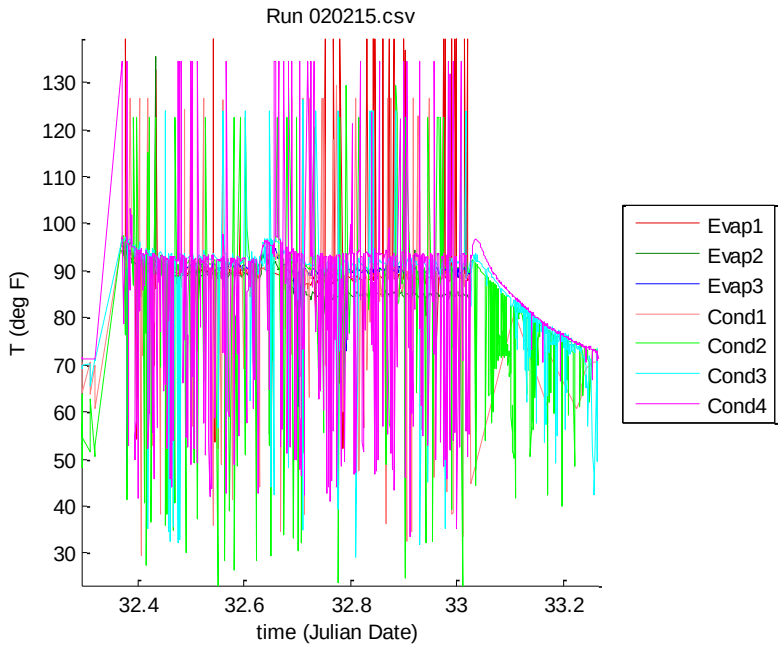

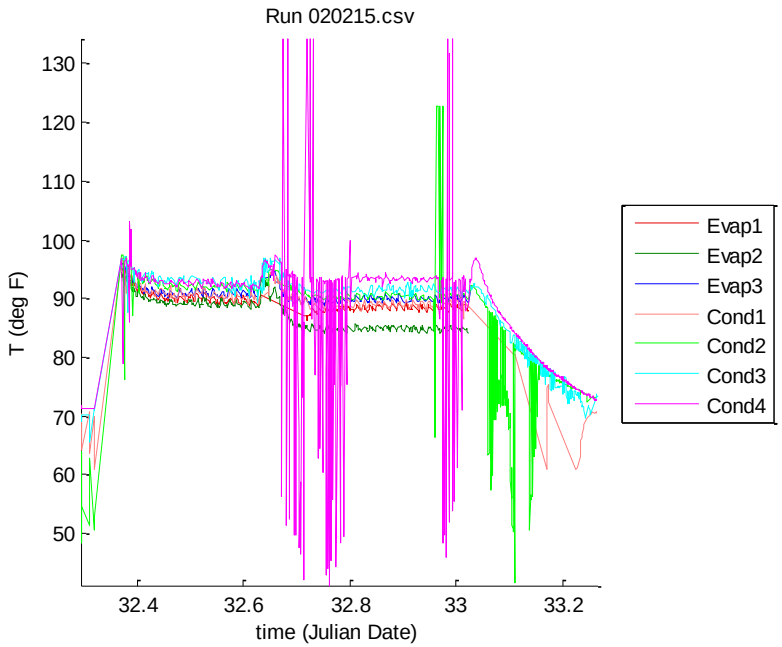

- Many outliers in raw data
  - Demanding environment and read behavior
- Filtering
  - Can identify and remove outliers with moving statistics
    - Determine moving average and standard deviation within a window of data
    - Remove points that are outside a specified number of standard deviations from the mean (confidence interval)
  - Multiple filter passes remove more outliers
  - Different window sizes allow for fine vs coarse filtering
- Filter software is still evolving

Results and Findings

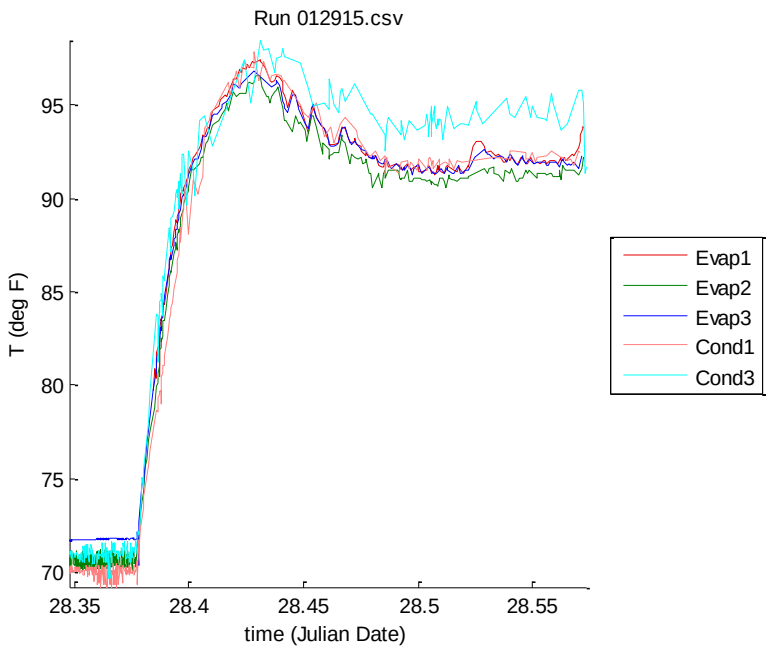

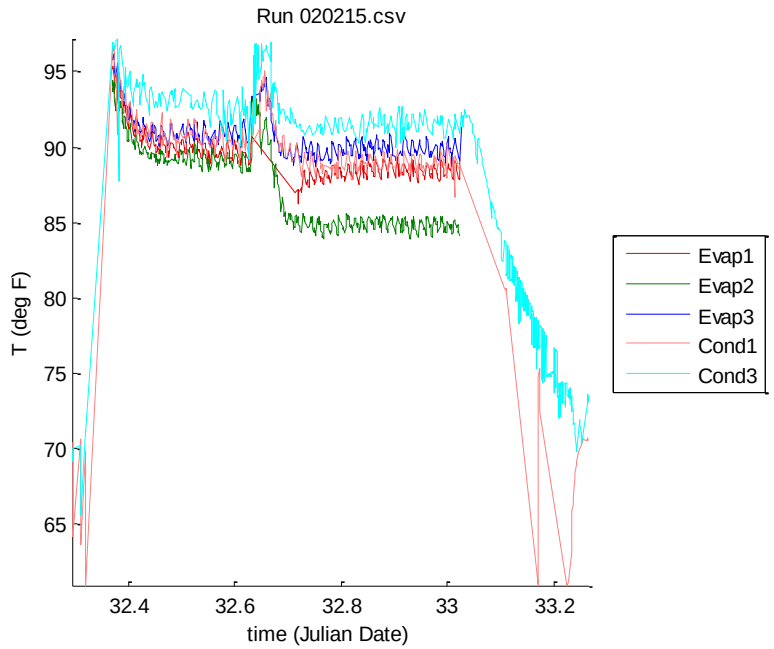

- Steady evaporator temperatures indicate stable phase change
- Temperature gradients
  - Highest temperatures near motor
  - Generally higher temperatures in condenser than evaporator
- All wireless sensors within ~4-7°F range
  - 2-5 degrees F for evaporator or condenser alone
  - **Quoted design for DA has condenser >10°F hotter than evaporator**
- Regular periodic fluctuation of ~1°F visible in all sensors
  - Also seen in DA thermocouples
  - Likely due to PCPA cycling

New Capabilities

- Temperature measurement in sealed, spinning centrifuge filled with caustic fluid
- Determine actual boiling/condensation temperatures
- Observe transient behavior
  - Startup/shutdown effects
  - Stable phase change
  - Response to disturbances

Problems & Issues

- Noise
  - Partially filtered by reader, but many outliers remain
  - Affected by operating conditions
  - More outliers in condenser sensors (narrow passage) than evaporator sensors (liquid splashing)
  - Mitigated through post-processing
- Read rate
  - Actual readings per minute below target
  - Still sufficient for our work
  - Affected by operating conditions
- Interference
  - No issues at first
  - After several weeks, wireless sensor system caused interference with thermocouples elsewhere in the system
  - Likely related to adhesive failure in evaporator and subsequent damage to those sensors

Problems & Issues (2)

- Adhesive failure
  - After several weeks of nominal operation, 3/4 evaporator sensors detached from the wall and failed
    - Condenser sensors (silicone adhesive) remained attached
  - Possible causes
    - Chemical – harsh chemicals may have damaged adhesive
    - Mechanical – force of moving fluid may have pulled sensors off
    - Material – adhesive may not have bonded well to wall
  - Rapid development schedule left insufficient time for full material compatibility tests. Abbreviated tests were done instead.

Conclusions & Lessons Learned

- A wireless RFID-based sensor system was successfully developed and integrated into the Urine Processor Assembly ground test article.
- The sensors have provided the first-ever temperature measurements of the evaporator and condenser regions of the Distillation Assembly during operation.
- The sensors provide real-time data on transient behavior within the DA and insight into temperature gradients in the system. This will allow for better validation of computational models of the DA and UPA.
- Several drawbacks and issues with the RFID sensing system were identified, including noisy data, slower than expected read rates, and the potential for interference with other equipment.
- A method for post-process filtering using moving statistics was developed and implemented to reduce the amount of noise in the wireless data.
- The failure of one of the sensor adhesives shows the difficulty of ensuring material compatibility, and the importance of testing.

Future Work

- Additional UPA testing with RFID sensors
- Improve filter software
- New sensors for the evaporator
  - Use silicone adhesive and water rather than pretreated urine

- Suggested upgrades for future RFID sensors
  - Better real-time filtering
  - Improve design to withstand high g-forces
  - Improve signal strength and read/transmit speed

Backup Slides

System Specifications

- Components
  - 8 metal-mount RFID sensors
    - Thermistor-based temperature measurement
  - 2 patch antennas
  - 1 reader
  - Operating software
- Sensor capabilities
  - Temperature ranges: 65-130°F, 100-200°F
  - Accuracy: ±1°F
  - Read rate
    - Target: 6 reads/min
    - Actual (average): 0.5-2 reads/min
- System development cost: <$100K

Distillation Assembly Overview