# Correlation and Reduction of Space Thermal Mathematical Models

(I. Torralbo, J. Piqueras, I. Perez-Grande, A. Sanz-Andres )

Presented By
Ignacio Torralbo

Thermal & Fluids Analysis Workshop
TFAWS 2017
August 21-25, 2017
NASA Marshall Space Flight Center
Huntsville, AL

# Contents

# Instituto Univeristario de microgravedad Ignacio Da Riva

- IDR/UPM is a research institute at the Universidad Politécnica de Madrid.
- We participate as part of the engineering team in the development of space instruments (Rosetta-Osiris, Sunrise, ExoMars2016-NOMAD, **SO/PHI**, SO EPD, ExoMars2020 Raman…)
- Educational activities are of key importance: Microsats UPM-Sat 1, UPM-Sat 2, UNION/Lián Hé (in cooperation with Beihang University).
- Facilities: computer centre, TVAC, CDF, etc.

# Solar Orbiter Mission

- Solar Orbiter is a M-size ESA mission to be launched in October 2018.
- Its main objective is to understand how the Sun creates and modifies the heliosphere.
- Solar Orbiter carries 4 in-situ and 6 remote sensing instruments.

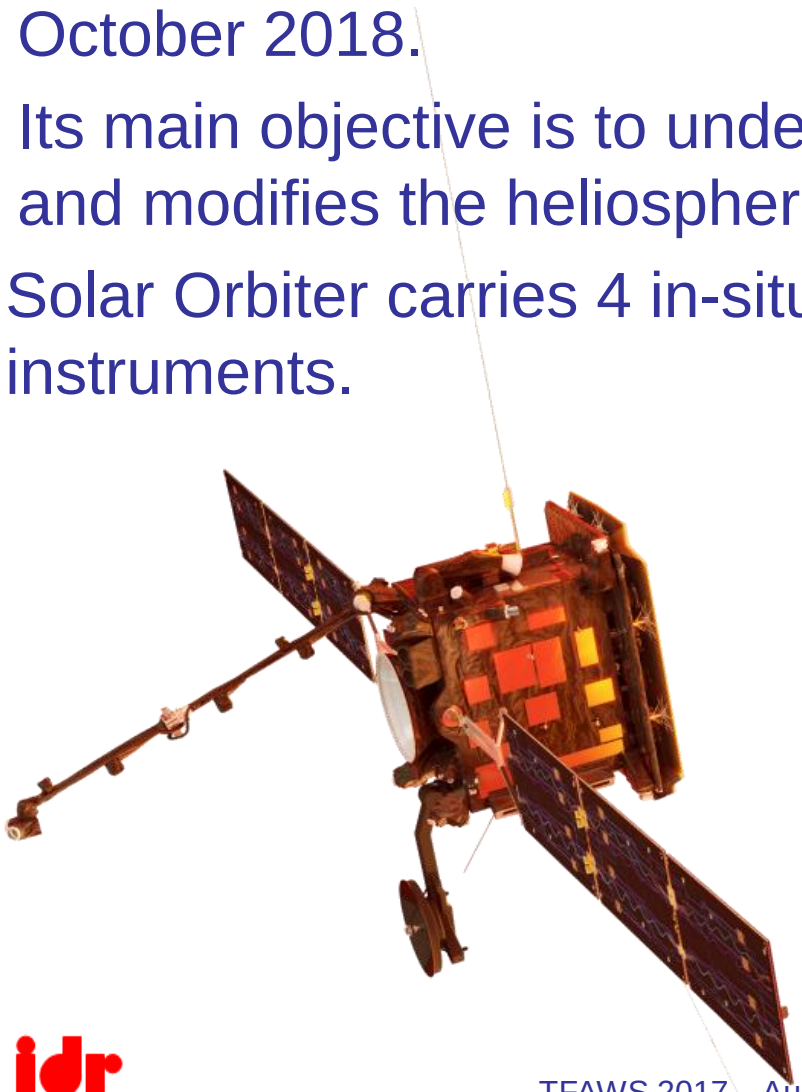

- Maximum solar latitude:34°
- Perihelion: 0.28 AU
- Several GAMs to reach the orbit.
- Thermal concept based on a heat shield.

# SO/PHI

- SO/PHI consists of two units: an optics unit and an electronics unit.
- The O-unit is 800 mm x 400 mm x 300 mm and contains two telescopes: HRT and FDT.
- The E-unit is 200 mm x 200 mm x 180 mm and consists of six PCBs.

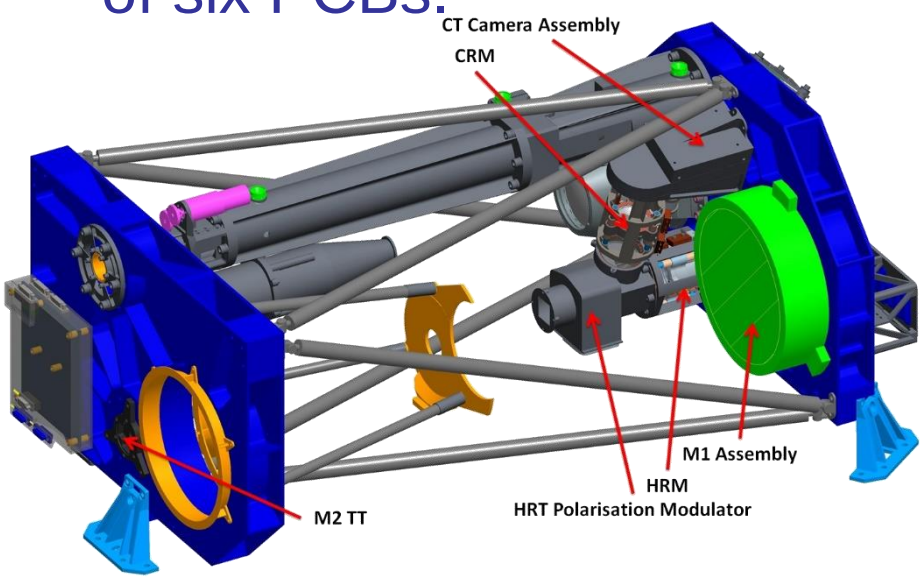


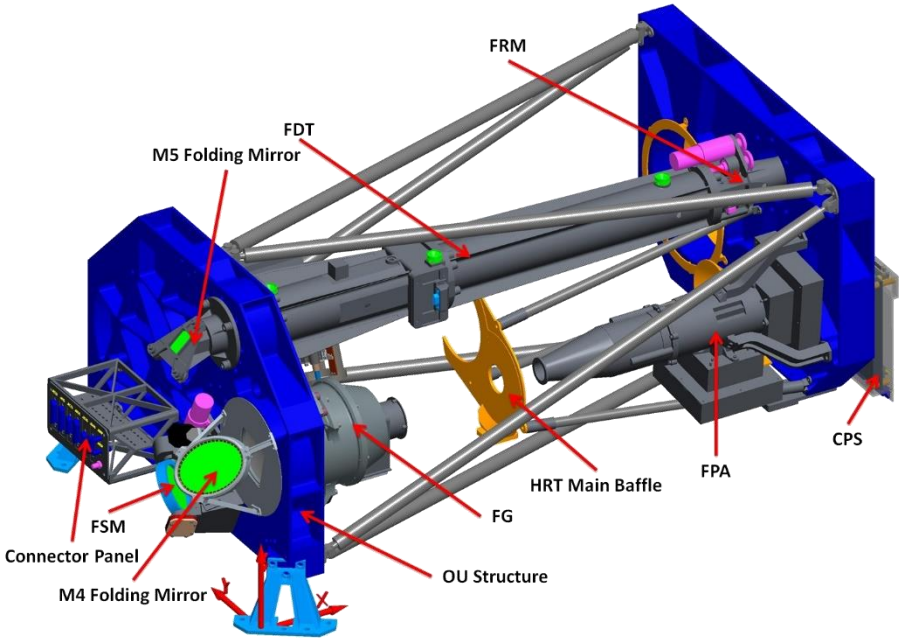

# TMM & GMM Description

- ESATAN-TMS
- SO/PHI GMM contains 2715 shells
- SO/PHI TMM contains 7133 thermal nodes
- 168 parameters

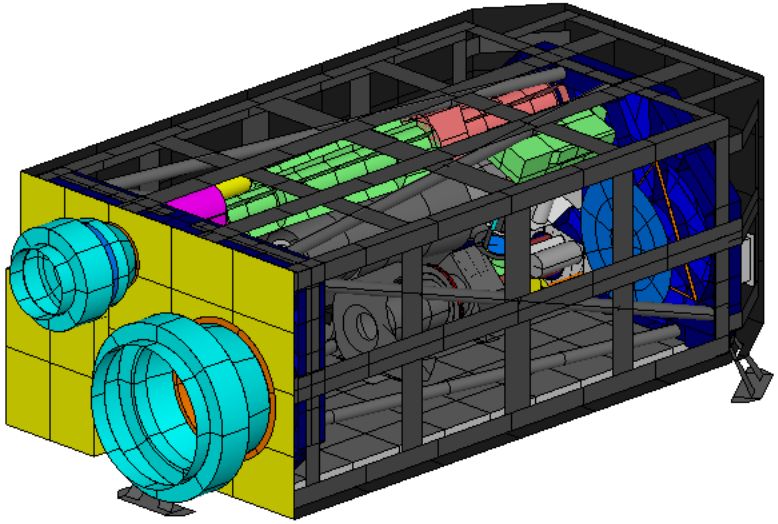

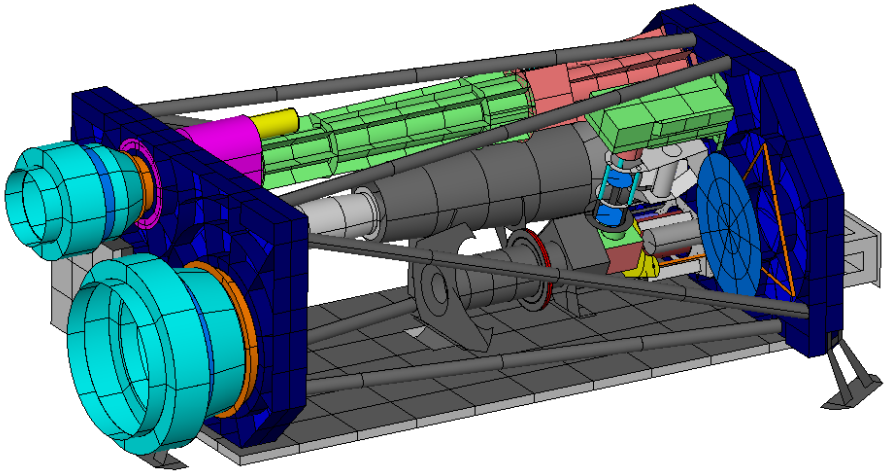

# TVAC Test

- Carried out by MPS at MPS facilities at Göttingen (GER)
- PHI O-unit + E-Unit PFM
- Operational Tests with real Sun
- > 10 days

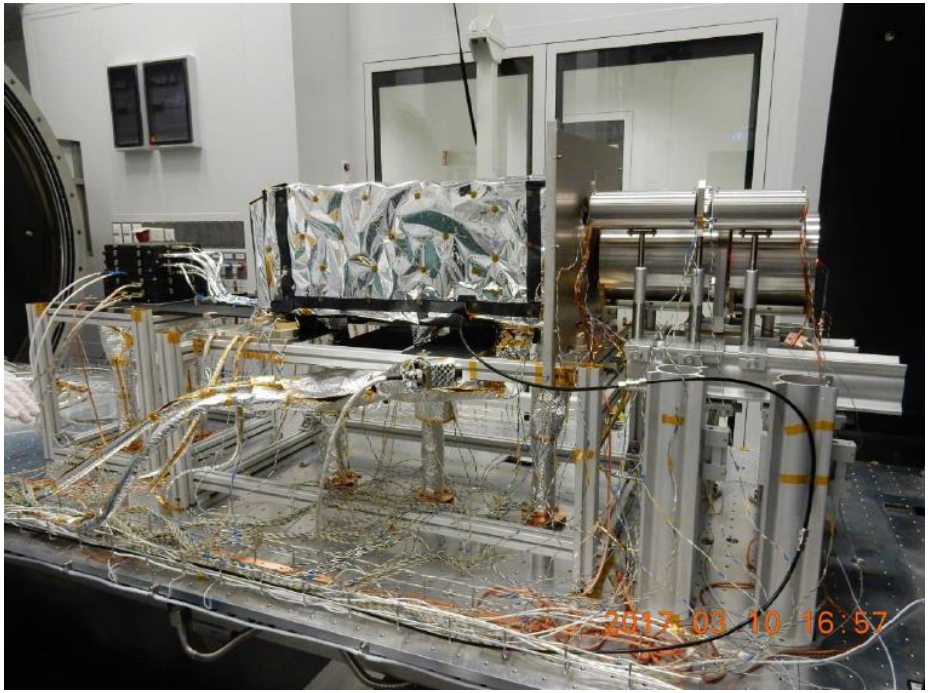


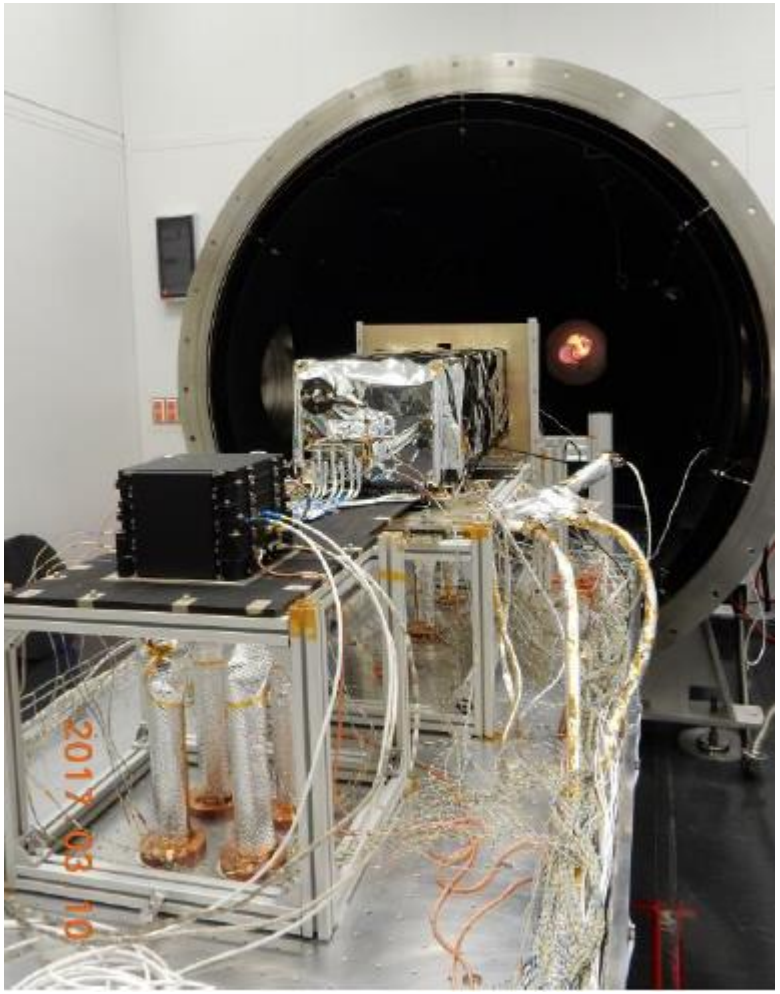

# TVAC Test

Acronyms:

| | | | |
|---|---|---|---|
| BP | Baseplate | HE | Hot Element |
| CE | Cold Element | H/K | Housekeeping |
| CP | Cold Plate | HREW | Heat Rejecting Entrance Window |
| ELE | Electronics Unit | HRT | High Resolution Telescope |
| EWFS | Entrance windows and FT system | MF | Mounting Feet/Flange |
| FDT | Full Disk Telescope | MP | Mounting Plate |
| FEW | FDT HREW | OPT | Optics Unit |
| FT | Feedthrough | THW | Thermal H/W |
| HAR | Harness | TS | Thermal Strap |
| HEW | HRT HREW | TVAC | Thermal Vacuum Chamber |

Legend:
- Heater
- Thermal sensor
- Control thermal sensor
- Thermal insulator

- 60 Thermal sensor to control the IFs and the external temperatures

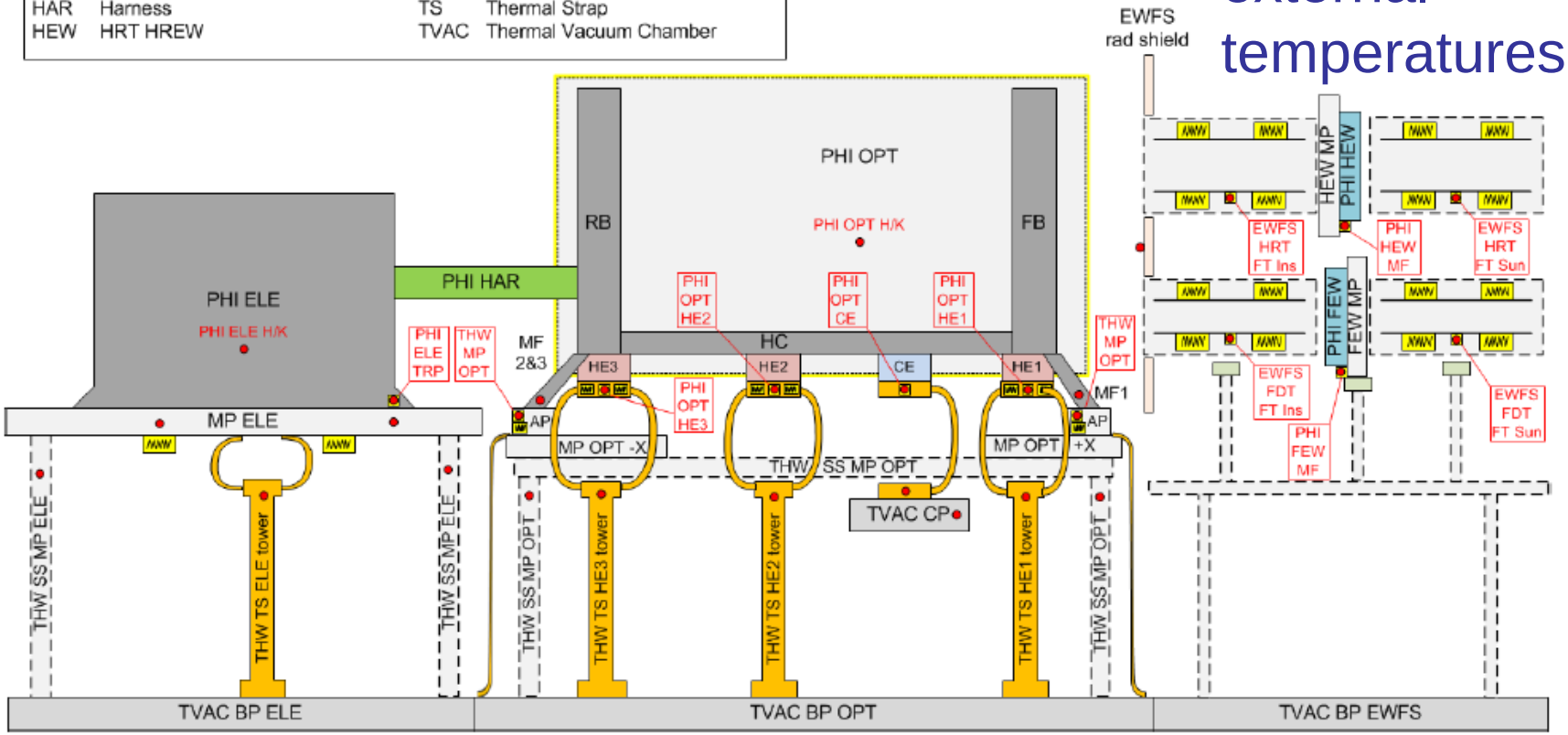

# TVAC Test

- 36 HK Temperature sensors
  - 11 E- Unit
  - 25 O- Unit
- 2 TBT phases for correlation
  - Hot Op FL
  - Cold Op FL (Useless)
  - Hot Op QL (Useless)
  - Cold Op QL

# TVAC Test

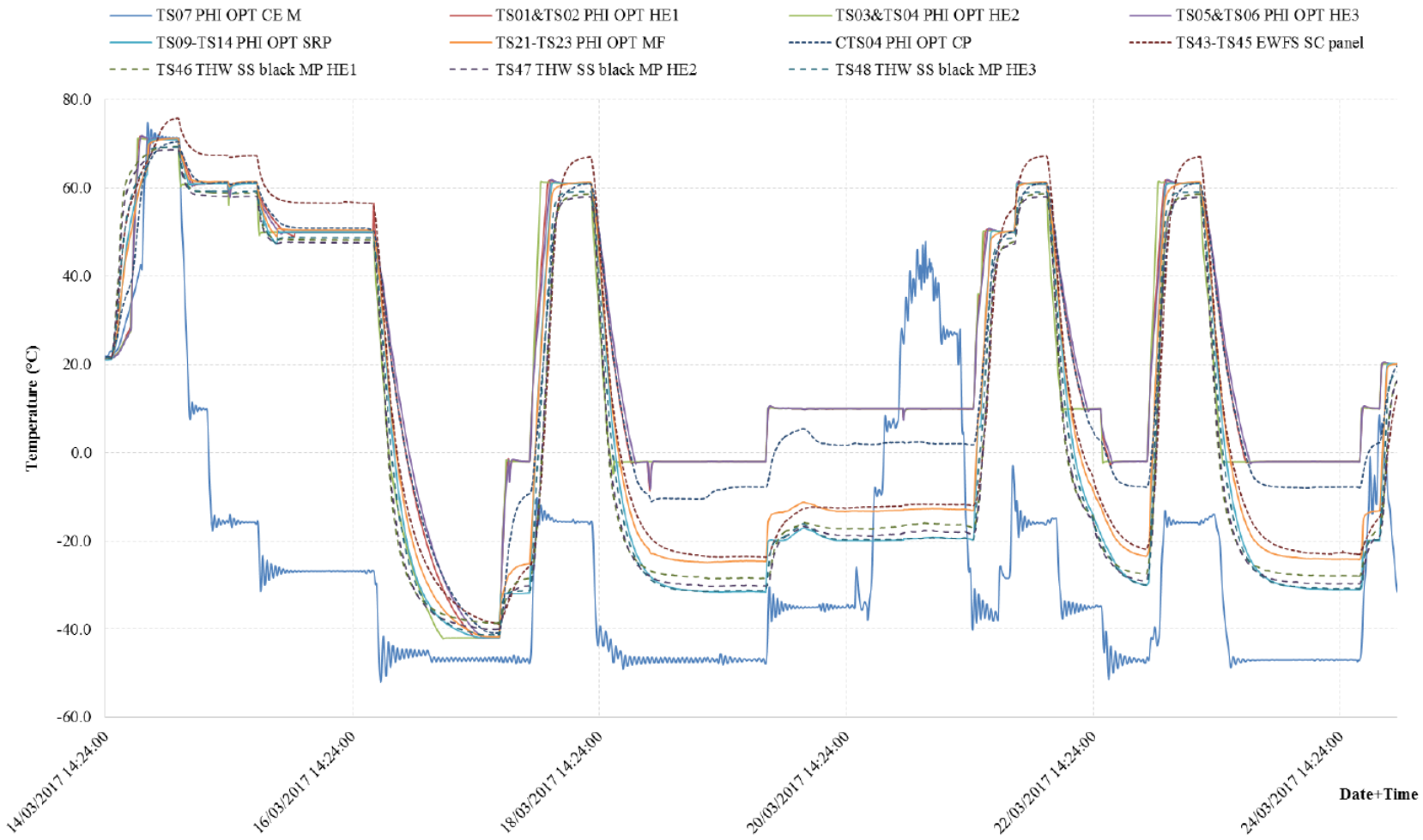
TS07 PHI OPT CE M
TS01&TS02 PHI OPT HE1
TS03&TS04 PHI OPT HE2
TS05&TS06 PHI OPT HE3
TS09-TS14 PHI OPT SRP
TS21-TS23 PHI OPT MF
CTS04 PHI OPT CP
TS43-TS45 EWFS SC panel
TS46 THW SS black MP HE1
TS47 THW SS black MP HE2
TS48 THW SS black MP HE3
Temperature (°C)
80.0
60.0
40.0
20.0
0.0
-20.0
-40.0
-60.0
14/03/2017 14:24:00
16/03/2017 14:24:00
18/03/2017 14:24:00
20/03/2017 14:24:00
22/03/2017 14:24:00
24/03/2017 14:24:00
Date+Time

# Correlation Method

- Minimization of the error of the model results with regard to the reference data
  - Test to model
  - Detailed TMM to Reduced TMM
- Gradient method. Jacobian matrix formulation and Moore-Penrose pseudo-inverse
- Several load cases can be added
- The started point must be close to the solution

# Correlation Method

Error

$$E(X) = \sum_{j=1}^{N_N} \left(T_R - Tj(x)\right)^2$$

Jacobian matrix

$$M_{ij} = \frac{\partial Tj(x)}{\partial xi}$$

After some algebra and using a local lineal transformation in the proximity of the solution we can write

[K]{T}={Q}

as

{t}=[M]{k}

{t} and {k}: Fluctuation around initial solution

When applying the minimum error condition ($\nabla_x E(x) = 0$)

$$\{k^*\} = ([M]^T[M])^{-1}[M]\{tR\}$$

For two analysis cases

$$\{k^*\} = [M_C]^{-1}_{C1C2}\left([M]^T\{t_{ref}\}|_{C1} + [M]^T\{t_{ref}\}|_{C2}\right)$$

{k*}: k correction vector
$\{t_{ref}\}$: Temperature difference

# Correlation Method

Linearize the system
[K]{T}={Q}

↓

Jacobian Matrix
[M]

↓

Calculate the correction

$$\{k^*\} = [M_C]^{-1}_{C1C2}\left([M]^T\{t_{ref}\}|_{C1} + [M]^T\{t_{ref}\}|_{C2}\right)$$

↓

Update the system

# PHI OPT TMM Correlation

- Two cases used for correlation
- 23 correlation points
- 29 parameters taken into account

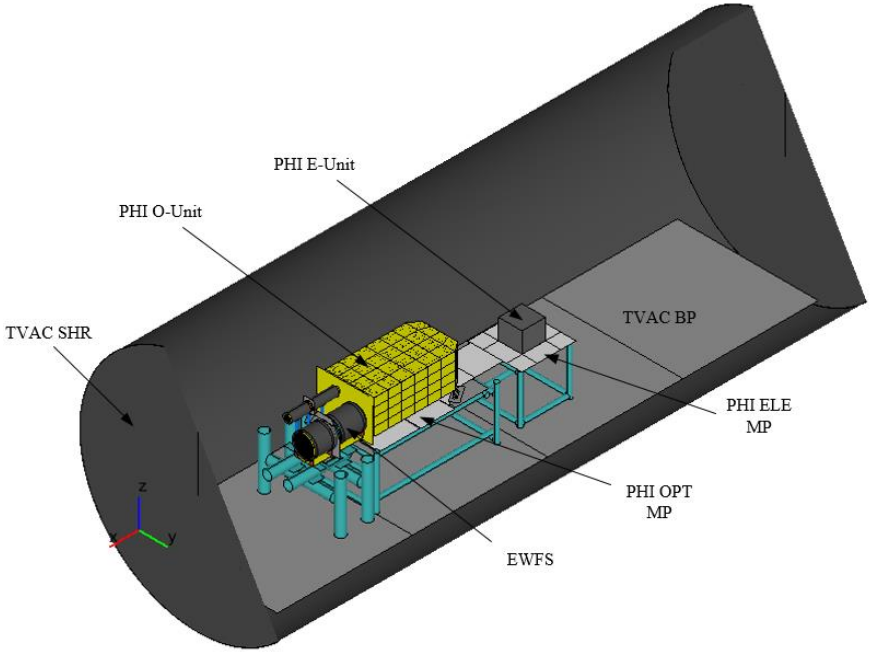


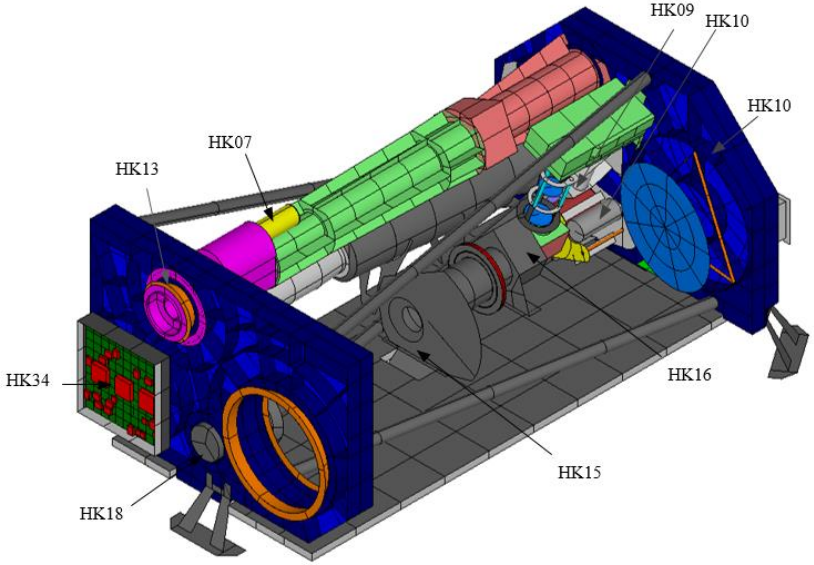

# PHI OPT TMM Correlation

## Hot case

### Jacobian matrix

| | | | | | | | | | | | | | | | | | | | | | | | | | | | |
|---|---|---|---|---|---|---|---|---|---|---|---|---|---|---|---|---|---|---|---|---|---|---|---|---|---|---|---|
| -2.83E+00 | -1.12E-01 | -1.38E-04 | -8.47E-05 | -1.58E-04 | -9.50E-05 | -8.77E-02 | -2.01E-03 | -7.01E-07 | -2.01E-03 | -4.32E-03 | 9.97E-04 | 6.81E-07 | -6.41E-02 | -4.58E-02 | -1.55E-02 | -3.10E-02 | -1.53E-06 | -1.97E-04 | -7.85E-03 | -7.61E-02 | -2.07E-09 | -2.76E-03 | -5.12E-03 | -2.94E-02 | 1.95E-02 | -5.92E-03 | -1.19E-03 | -1.21E-03 |
| -2.83E+00 | -1.12E-01 | -1.38E-04 | -8.48E-05 | -1.58E-04 | -9.52E-05 | -8.74E-02 | -2.01E-03 | -6.99E-07 | -2.01E-03 | -4.35E-03 | 9.98E-04 | 6.85E-07 | -6.43E-02 | -4.58E-02 | -1.55E-02 | -3.10E-02 | -1.53E-06 | -1.97E-04 | -7.83E-03 | -7.62E-02 | -2.06E-09 | -2.76E-03 | -5.12E-03 | -2.94E-02 | 1.95E-02 | -5.92E-03 | -1.19E-03 | -1.21E-03 |
| -2.79E+00 | -1.06E-01 | -1.58E-04 | -7.77E-05 | -1.76E-04 | -9.41E-05 | -7.12E-02 | -2.24E-03 | -9.75E-07 | -2.24E-03 | -1.40E-02 | 3.65E-04 | 1.71E-06 | -9.33E-02 | -5.37E-02 | -1.73E-02 | -3.43E-02 | -1.30E-06 | -2.80E-04 | -8.11E-03 | -8.89E-02 | -2.84E-09 | -3.17E-03 | -5.78E-03 | -3.00E-02 | 2.19E-02 | -6.64E-03 | -1.35E-03 | -1.37E-03 |
| -2.79E+00 | -1.06E-01 | -1.58E-04 | -7.77E-05 | -1.76E-04 | -9.41E-05 | -7.11E-02 | -2.24E-03 | -9.76E-07 | -2.24E-03 | -1.40E-02 | 3.65E-04 | 1.71E-06 | -9.33E-02 | -5.37E-02 | -1.73E-02 | -3.43E-02 | -1.30E-06 | -2.81E-04 | -8.07E-03 | -8.90E-02 | -2.82E-09 | -3.17E-03 | -5.78E-03 | -3.00E-02 | 2.19E-02 | -6.64E-03 | -1.35E-03 | -1.37E-03 |
| -8.55E-03 | 4.93E-05 | -3.71E-02 | -2.76E-06 | -8.08E-05 | -3.96E-05 | -5.99E-03 | -8.80E-03 | -4.42E-05 | -8.80E-03 | -3.35E-02 | -6.77E-03 | 2.99E-06 | -6.52E-02 | -9.07E-02 | -2.23E-02 | -4.32E-02 | 5.22E-07 | -4.94E-05 | -2.43E-02 | -3.72E-02 | -2.25E-09 | -3.39E-03 | -8.41E-04 | -8.77E-03 | 7.57E-02 | -2.50E-02 | -3.43E-03 | -3.61E-03 |
| -1.63E-02 | 1.02E-04 | -4.11E-04 | 2.15E-02 | -2.76E-03 | -2.20E-04 | -1.19E-02 | -9.13E-03 | -3.84E-06 | -9.13E-03 | -5.70E-02 | -1.16E-02 | 5.11E-06 | -1.16E-01 | -9.77E-02 | -2.86E-02 | -5.01E-02 | 3.86E-08 | -1.25E-04 | -4.28E-02 | -6.21E-02 | -1.59E-09 | -4.55E-03 | -2.47E-03 | -1.60E-02 | 7.38E-02 | -2.31E-02 | -3.98E-03 | -4.14E-03 |
| -7.09E-03 | 4.16E-05 | -2.34E-04 | -1.81E-04 | -1.62E-02 | -7.17E-05 | -4.90E-03 | -1.26E-02 | -1.55E-06 | -1.26E-02 | -2.47E-02 | -5.02E-03 | 2.18E-06 | -5.16E-02 | -1.68E-02 | -9.61E-03 | -1.58E-02 | 3.61E-08 | -4.88E-05 | -1.93E-02 | -2.77E-02 | -7.84E-10 | -2.10E-03 | -9.04E-04 | -6.80E-03 | 6.23E-02 | -1.94E-02 | -3.17E-03 | -3.37E-03 |
| -1.83E-02 | 1.91E-04 | -2.74E-04 | -6.51E-05 | -5.35E-04 | -1.23E-04 | -2.27E-02 | -3.86E-03 | -3.02E-06 | -3.86E-03 | -8.27E-02 | -1.16E-02 | 8.66E-06 | -1.49E-01 | -7.92E-02 | -2.09E-02 | -3.88E-02 | -6.20E-07 | -2.54E-04 | -5.59E-02 | -7.80E-02 | -2.97E-09 | -4.68E-03 | -4.77E-03 | -2.35E-02 | 3.54E-02 | -1.09E-02 | -2.07E-03 | -2.12E-03 |
| -1.81E-02 | 1.91E-04 | -2.72E-04 | -6.40E-05 | -5.31E-04 | -8.81E-05 | -2.27E-02 | -3.83E-03 | -3.01E-06 | -3.83E-03 | -8.24E-02 | -1.15E-02 | 8.63E-06 | -1.48E-01 | -7.88E-02 | -2.08E-02 | -3.86E-02 | -6.30E-07 | -2.53E-04 | -5.57E-02 | -7.77E-02 | -2.98E-09 | -4.66E-03 | -4.76E-03 | -2.34E-02 | 3.52E-02 | -1.08E-02 | -2.05E-03 | -2.11E-03 |
| -2.28E-02 | -6.11E-04 | -9.09E-05 | 2.45E-06 | -9.62E-05 | 2.63E-05 | -1.30E+00 | -1.14E-03 | -1.08E-06 | -1.14E-03 | 2.72E-02 | 1.97E-03 | -2.84E-06 | 6.72E-02 | -2.76E-02 | -7.05E-03 | -1.36E-02 | -1.77E-06 | -9.53E-05 | -7.93E-04 | -2.09E-02 | -6.01E-10 | -2.17E-03 | -1.30E-03 | -1.51E-02 | 1.06E-02 | -3.26E-03 | -6.22E-04 | -6.39E-04 |
| -3.26E-03 | 1.84E-05 | -4.84E-04 | -4.10E-06 | 2.23E-05 | -1.87E-05 | -2.21E-03 | -5.13E-02 | -9.32E-03 | -5.13E-02 | -1.22E-02 | -2.51E-03 | 1.07E-06 | -2.50E-02 | -1.49E-02 | -1.94E-02 | 7.07E-03 | 7.58E-08 | -1.90E-05 | -9.45E-03 | -1.37E-02 | -5.87E-10 | -1.17E-03 | -3.31E-04 | -3.24E-03 | 3.96E-02 | -1.27E-02 | -1.85E-03 | -1.97E-03 |
| -2.82E-03 | 1.58E-05 | -2.51E-04 | -4.21E-06 | 2.55E-05 | -1.67E-05 | -1.89E-03 | -5.59E-02 | 4.24E-04 | -5.59E-02 | -1.04E-02 | -2.13E-03 | 9.05E-07 | -2.15E-02 | -1.06E-02 | -2.00E-02 | 1.08E-02 | 4.52E-08 | -1.66E-05 | -8.17E-03 | -1.17E-02 | -4.46E-10 | -9.81E-04 | -2.85E-04 | -2.76E-03 | 3.57E-02 | -1.14E-02 | -1.69E-03 | -1.81E-03 |
| -2.58E-03 | 1.44E-05 | -1.27E-04 | -4.24E-06 | 9.61E-05 | -1.55E-05 | -1.72E-03 | -2.80E-02 | 1.74E-04 | -2.80E-02 | -9.38E-03 | -1.92E-03 | 8.20E-07 | -1.96E-02 | 3.98E-03 | -1.27E-02 | 1.38E-02 | 3.21E-08 | -1.53E-05 | -7.47E-03 | -1.06E-02 | -3.96E-10 | -8.75E-04 | -2.67E-04 | -2.50E-03 | 3.37E-02 | -1.07E-02 | -1.61E-03 | -1.72E-03 |
| 6.12E-03 | -7.00E-05 | -1.03E-04 | 1.63E-06 | -1.09E-04 | 3.64E-05 | -2.30E-02 | -1.29E-03 | -1.20E-06 | -1.29E-03 | 5.39E-02 | -3.59E-03 | -6.11E-06 | 7.67E-02 | -2.82E-02 | -7.25E-03 | -1.38E-02 | -1.42E-06 | -9.54E-05 | -3.36E-02 | -2.04E-02 | -1.19E-09 | -2.26E-03 | -2.12E-03 | -1.40E-02 | 1.18E-02 | -3.66E-03 | -6.85E-04 | -7.04E-04 |
| -4.93E-02 | 6.01E-04 | -1.93E-04 | 5.23E-06 | -1.91E-04 | 2.01E-05 | -2.30E-02 | -2.49E-03 | -2.17E-06 | -2.49E-03 | -2.62E-01 | 5.03E-02 | 1.66E-05 | -1.03E+01 | -5.39E-02 | -1.39E-02 | -2.62E-02 | -6.47E-06 | -4.25E-04 | -5.21E-01 | -2.87E-01 | -4.43E-09 | -4.82E-03 | -9.63E-03 | -4.30E-02 | 2.27E-02 | -7.01E-03 | -1.32E-03 | -1.35E-03 |
| -4.87E-03 | 2.21E-05 | -1.41E-04 | -2.11E-06 | -1.81E-04 | -2.25E-05 | -2.85E-03 | -1.09E-02 | -7.17E-07 | -1.09E-02 | -1.42E-02 | -2.84E-03 | 1.25E-06 | -3.03E-02 | -1.82E+01 | -5.22E+00 | -9.53E+01 | 7.25E-08 | -2.94E-05 | -1.04E-02 | -1.71E-02 | -6.81E-11 | -1.44E-03 | -2.67E-04 | -4.04E-03 | 5.82E-02 | -1.70E-02 | -3.36E-03 | -3.60E-03 |
| -3.48E-02 | 4.74E-04 | -2.07E-04 | 1.84E-05 | -1.68E-04 | -8.17E-06 | -2.24E-02 | -2.35E-03 | -2.38E-06 | -2.35E-03 | -7.29E-02 | -4.74E-03 | 7.14E-06 | -3.46E-01 | -6.70E-02 | -1.64E-02 | -3.17E-02 | 3.65E-03 | -9.48E-03 | 4.17E-01 | -7.50E-01 | -1.26E-07 | -9.71E-03 | -2.25E-01 | -5.39E-01 | 2.25E-02 | -6.89E-03 | -1.34E-03 | -1.37E-03 |
| -3.50E-02 | 4.88E-04 | -2.06E-04 | 1.86E-05 | -1.68E-04 | -7.73E-06 | -2.27E-02 | -2.35E-03 | -2.37E-06 | -2.35E-03 | -7.28E-02 | -4.63E-03 | 7.12E-06 | -3.52E-01 | -6.69E-02 | -1.63E-02 | -3.17E-02 | -3.69E-03 | -9.82E-03 | 4.48E-01 | -7.88E-01 | -1.23E-07 | -9.67E-03 | -2.21E-01 | -5.32E-01 | 2.24E-02 | -6.89E-03 | -1.34E-03 | -1.37E-03 |
| -4.27E-02 | 8.95E-04 | -1.90E-04 | 8.26E-06 | -1.70E-04 | -3.69E-06 | -2.94E-02 | -2.38E-03 | -2.13E-06 | -2.38E-03 | -1.06E-01 | 7.01E-03 | 6.90E-06 | -9.82E-01 | -5.21E-02 | -1.33E-02 | -2.53E-02 | -3.32E-05 | -5.75E-04 | -3.00E+01 | -1.51E+00 | -7.90E-09 | -5.92E-03 | -1.14E-02 | -6.43E-02 | 2.16E-02 | -6.68E-03 | -1.24E-03 | -1.28E-03 |
| -3.80E-03 | 2.36E-05 | -5.54E-05 | 8.86E-07 | -3.77E-05 | -7.67E-06 | -2.45E-03 | -5.72E-04 | -6.56E-07 | -5.72E-04 | -1.21E-02 | -1.59E-03 | 1.21E-06 | -3.09E-02 | -1.78E-02 | -4.32E-03 | -8.57E-03 | 3.00E-06 | 1.69E-04 | -3.19E-03 | -2.35E-02 | 5.00E-09 | 2.58E-04 | -5.73E-03 | 4.44E-02 | 5.59E-03 | -1.71E-03 | -3.36E-04 | -3.44E-04 |
| -3.25E-02 | 3.48E-04 | -2.10E-04 | 8.94E-06 | -1.77E-04 | -2.37E-05 | -2.08E-02 | -2.46E-03 | -2.36E-06 | -2.46E-03 | -7.89E-02 | -6.25E-03 | 8.02E-06 | -3.14E-01 | -6.93E-02 | -1.73E-02 | -3.33E-02 | 5.31E-05 | -8.21E-03 | 8.64E-02 | -3.58E-01 | -7.81E-08 | -1.07E-02 | -2.68E-01 | -6.90E-01 | 2.35E-02 | -7.20E-03 | -1.40E-03 | -1.43E-03 |
| -7.72E-03 | 3.37E-05 | -3.26E-04 | -2.68E-06 | -3.88E-06 | -3.93E-05 | -4.58E-03 | -8.77E-03 | -3.15E-06 | -8.77E-03 | -2.29E-02 | -4.48E-03 | 2.05E-06 | -4.89E-02 | -1.80E-01 | -6.26E-02 | -7.59E-02 | 1.04E-07 | -4.57E-05 | -1.60E-02 | -2.73E-02 | -1.23E-09 | -2.28E-03 | -4.09E-04 | -6.70E-03 | -1.43E+01 | -9.32E-01 | -1.21E-01 | -1.41E-01 |
| -1.66E-03 | 6.60E-06 | -6.50E-05 | -2.64E-07 | -9.62E-06 | -7.86E-06 | -9.58E-04 | -1.55E-03 | -6.36E-07 | -1.55E-03 | -4.75E-03 | -9.20E-04 | 4.28E-07 | -1.02E-02 | -3.68E-02 | -1.18E-02 | -1.63E-02 | 2.38E-08 | -9.79E-06 | -3.24E-03 | -5.72E-03 | -2.87E-10 | -4.81E-04 | -7.38E-05 | -1.39E-03 | -1.12E+00 | 6.00E-01 | -9.50E-01 | -2.21E-01 |

## Cold case

| | | | | | | | | | | | | | | | | | | | | | | | | | | | |
|---|---|---|---|---|---|---|---|---|---|---|---|---|---|---|---|---|---|---|---|---|---|---|---|---|---|---|---|
| -2.74E+01 | -9.11E-01 | -7.13E-05 | -7.27E-05 | 4.87E-05 | -1.16E-04 | -8.33E-02 | -5.29E-04 | -1.75E-06 | -5.29E-04 | -3.41E-03 | -1.39E-04 | 2.91E-07 | -5.40E-02 | -2.94E-02 | -8.18E-03 | -1.61E-02 | 2.13E-05 | -5.03E-03 | -7.21E-03 | -1.39E-01 | -1.08E-08 | -3.77E-03 | -3.81E-02 | -7.11E-02 | 3.27E-02 | -1.92E-03 | -4.77E-04 | -4.52E-04 |
| -2.74E+01 | -9.12E-01 | -7.13E-05 | -7.27E-05 | 4.87E-05 | -1.16E-04 | -8.31E-02 | -5.29E-04 | -1.75E-06 | -5.29E-04 | -3.42E-03 | -1.38E-04 | 2.92E-07 | -5.41E-02 | -2.94E-02 | -8.18E-03 | -1.61E-02 | 2.13E-05 | -5.03E-03 | -7.19E-03 | -1.39E-01 | -1.08E-08 | -3.77E-03 | -3.82E-02 | -7.11E-02 | 3.27E-02 | -1.92E-03 | -4.77E-04 | -4.52E-04 |
| -2.79E+01 | -8.84E-01 | -8.21E-05 | -8.04E-05 | 5.41E-05 | -1.82E-04 | -6.98E-02 | -6.09E-04 | -2.01E-06 | -6.09E-04 | -8.46E-03 | -5.14E-04 | 8.01E-07 | -7.84E-02 | -3.54E-02 | -9.60E-03 | -1.90E-02 | 3.44E-05 | -6.51E-03 | -7.97E-03 | -1.67E-01 | -1.28E-08 | -4.38E-03 | -5.51E-02 | -7.29E-02 | 3.83E-02 | -2.24E-03 | -5.61E-04 | -5.31E-04 |
| -2.79E+01 | -8.84E-01 | -8.21E-05 | -8.03E-05 | 5.41E-05 | -1.82E-04 | -6.98E-02 | -6.09E-04 | -2.01E-06 | -6.09E-04 | -8.46E-03 | -5.13E-04 | 8.02E-07 | -7.85E-02 | -3.54E-02 | -9.59E-03 | -1.90E-02 | 3.44E-05 | -6.52E-03 | -7.93E-03 | -1.67E-01 | -1.28E-08 | -4.38E-03 | -5.52E-02 | -7.28E-02 | 3.83E-02 | -2.24E-03 | -5.61E-04 | -5.31E-04 |
| -8.86E-02 | 6.46E-04 | -3.41E-02 | -7.19E-07 | 9.91E-05 | -1.36E-04 | -7.64E-03 | -4.24E-03 | -9.37E-05 | -4.24E-03 | -2.83E-02 | -5.37E-03 | 2.38E-06 | -7.68E-02 | -7.71E-02 | -1.84E-02 | -3.97E-02 | -2.92E-05 | -1.14E-03 | -2.81E-02 | -9.68E-02 | -1.39E-08 | -5.48E-03 | -4.32E-03 | -3.09E-02 | 1.88E-01 | -1.61E-02 | -2.36E-03 | -2.31E-03 |
| -1.87E-01 | 1.56E-03 | -3.10E-04 | 4.73E-02 | 1.77E-03 | -6.60E-04 | -1.82E-02 | -4.81E-03 | -6.48E-06 | -4.81E-03 | -5.30E-02 | -1.03E-02 | 4.49E-06 | -1.50E-01 | -9.37E-02 | -2.56E-02 | -5.27E-02 | 4.24E-05 | -3.34E-03 | -5.39E-02 | -1.74E-01 | -1.19E-08 | -7.25E-03 | -3.92E-02 | -6.07E-02 | 2.02E-01 | -1.30E-02 | -2.76E-03 | -2.66E-03 |
| -7.86E-02 | 6.21E-04 | -1.35E-04 | 3.64E-04 | 8.83E-03 | -2.16E-04 | -7.14E-03 | -7.05E-03 | -2.18E-06 | -7.05E-03 | -2.22E-02 | -4.37E-03 | 1.84E-06 | -6.44E-02 | -1.34E-02 | -6.09E-03 | -1.76E-02 | 1.71E-05 | -1.25E-03 | -2.35E-02 | -7.52E-02 | -5.13E-09 | -3.31E-03 | -1.27E-02 | -2.51E-02 | 1.79E-01 | -1.13E-02 | -2.33E-03 | -2.29E-03 |
| -1.45E-01 | 2.08E-03 | -1.70E-04 | -8.74E-04 | 3.09E-04 | -1.34E-02 | -2.61E-02 | -1.53E-03 | -3.92E-06 | -1.53E-03 | -5.76E-02 | -9.24E-03 | 5.43E-06 | -1.44E-01 | -6.16E-02 | -1.56E-02 | -3.22E-02 | 3.52E-05 | -4.57E-03 | -5.31E-02 | -1.61E-01 | -1.16E-08 | -5.73E-03 | -6.36E-02 | -7.24E-02 | 8.04E-02 | -4.95E-03 | -1.14E-03 | -1.09E-03 |
| -1.44E-01 | 2.08E-03 | -1.69E-04 | -8.67E-04 | 3.07E-04 | -1.32E-02 | -2.61E-02 | -1.52E-03 | -3.90E-06 | -1.52E-03 | -5.74E-02 | -9.19E-03 | 5.41E-06 | -1.43E-01 | -6.13E-02 | -1.56E-02 | -3.21E-02 | 3.50E-05 | -4.56E-03 | -5.29E-02 | -1.61E-01 | -1.16E-08 | -5.71E-03 | -6.33E-02 | -7.23E-02 | 8.00E-02 | -4.92E-03 | -1.13E-03 | -1.08E-03 |
| -3.47E-01 | -6.75E-03 | -6.43E-05 | -8.02E-05 | 5.12E-05 | 8.65E-05 | -2.90E+00 | -4.54E-04 | -1.52E-06 | -4.54E-04 | 1.67E-02 | 1.15E-03 | -1.69E-06 | 6.32E-02 | -2.47E-02 | -6.12E-03 | -1.28E-02 | -1.87E-05 | -1.79E-03 | 3.93E-03 | -5.35E-02 | -9.67E-09 | -3.30E-03 | 1.74E-02 | -4.98E-02 | 2.58E-02 | -1.58E-03 | -3.69E-04 | -3.52E-04 |
| -2.98E-02 | 2.21E-04 | -3.43E-04 | 4.29E-05 | 9.18E-05 | -5.06E-05 | -2.54E-03 | -8.77E-03 | -1.84E-02 | -8.77E-03 | -9.05E-03 | -1.79E-03 | 7.44E-07 | -2.61E-02 | -1.02E-02 | -1.57E-02 | 6.67E-03 | 2.57E-06 | -3.89E-04 | -9.64E-03 | -3.14E-02 | -2.70E-09 | -1.62E-03 | -2.14E-03 | -1.00E-02 | 1.01E-01 | -7.47E-03 | -1.26E-03 | -1.24E-03 |
| -2.62E-02 | 1.95E-04 | -1.66E-04 | 4.57E-05 | 9.30E-05 | -4.53E-05 | -2.23E-03 | -9.28E-03 | 6.98E-04 | -9.28E-03 | -7.84E-03 | -1.55E-03 | 6.39E-07 | -2.29E-02 | -6.67E-03 | -1.57E-02 | 9.31E-03 | 3.91E-06 | -3.45E-04 | -8.48E-03 | -2.73E-02 | -2.12E-09 | -1.38E-03 | -1.99E-03 | -8.71E-03 | 9.45E-02 | -6.77E-03 | -1.18E-03 | -1.16E-03 |
| -2.43E-02 | 1.79E-04 | -6.35E-05 | 4.80E-05 | 5.41E-05 | -4.24E-05 | -2.05E-03 | 2.41E-02 | 2.91E-04 | 2.41E-02 | -7.17E-03 | -1.42E-03 | 5.84E-07 | -2.10E-02 | 6.20E-03 | -8.99E-03 | 1.21E-02 | 4.30E-06 | -3.21E-04 | -7.82E-03 | -2.50E-02 | -1.85E-09 | -1.23E-03 | -2.03E-03 | -7.94E-03 | 9.11E-02 | -6.38E-03 | -1.14E-03 | -1.12E-03 |
| 7.24E-02 | -6.64E-04 | -7.25E-05 | -1.03E-04 | 6.40E-05 | 1.95E-04 | -2.96E-02 | -5.17E-04 | -1.76E-06 | -5.17E-04 | 4.01E-02 | -3.89E-03 | -4.24E-06 | 8.86E-02 | -2.45E-02 | -6.10E-03 | -1.28E-02 | -9.02E-06 | -1.79E-03 | -3.48E-02 | -3.74E-02 | -8.89E-09 | -3.16E-03 | -1.10E-02 | -4.42E-02 | 2.85E-02 | -1.79E-03 | -4.04E-04 | -3.86E-04 |
| -5.45E-01 | 1.09E-02 | -1.47E-04 | -1.49E-04 | 1.17E-04 | 2.41E-05 | -3.30E-02 | -1.05E-03 | -3.49E-06 | -1.05E-03 | -2.73E-01 | 3.16E-02 | 1.56E-05 | -1.74E+01 | -5.13E-02 | -1.27E-02 | -2.66E-02 | -9.52E-05 | -9.24E-03 | -7.20E-01 | -1.02E+00 | -3.29E-08 | -7.66E-03 | -2.03E-01 | -1.64E-01 | 5.88E-02 | -3.69E-03 | -8.36E-04 | -7.97E-04 |
| -4.13E-02 | 2.91E-04 | -6.59E-05 | 7.72E-05 | -4.61E-04 | -7.15E-05 | -3.25E-03 | -6.27E-03 | -7.03E-07 | -6.27E-03 | -1.02E-02 | -1.99E-03 | 8.40E-07 | -3.08E-02 | -2.18E+01 | -6.13E+00 | -1.57E+02 | 8.81E-06 | -5.35E-04 | -1.03E-02 | -3.78E-02 | -2.63E-09 | -2.07E-03 | -1.44E-03 | -1.30E-02 | 1.68E-01 | -8.86E-03 | -2.19E-03 | -2.17E-03 |
| -2.65E-01 | 4.67E-03 | -1.15E-04 | -6.49E-05 | 6.35E-05 | -1.43E-04 | -2.33E-02 | -6.70E-04 | -2.87E-06 | -6.70E-04 | -4.68E-02 | -3.72E-03 | 4.22E-06 | -3.44E-01 | -4.56E-02 | -1.09E-02 | -2.35E-02 | -3.68E-01 | -2.37E-01 | 3.94E-01 | -1.94E+00 | -9.50E-07 | -1.61E-02 | -5.56E+00 | -1.83E+00 | 4.06E-02 | -2.49E-03 | -5.84E-04 | -5.56E-04 |
| -2.66E-01 | 4.81E-03 | -1.14E-04 | -6.51E-05 | 6.35E-05 | -1.42E-04 | -2.36E-02 | -6.69E-04 | -2.85E-06 | -6.69E-04 | -4.68E-02 | -3.67E-03 | 4.20E-06 | -3.50E-01 | -4.54E-02 | -1.09E-02 | -2.34E-02 | -1.08E-01 | -2.40E-01 | 4.23E-01 | -2.04E+00 | -7.97E-07 | -1.60E-02 | -5.48E+00 | -1.81E+00 | 4.06E-02 | -2.49E-03 | -5.83E-04 | -5.55E-04 |
| -5.02E-01 | 1.48E-02 | -1.47E-04 | -1.02E-04 | 1.07E-04 | -7.11E-05 | -4.51E-02 | -9.91E-04 | -3.46E-06 | -9.91E-04 | -1.10E-01 | 2.47E-03 | 6.59E-06 | -1.53E+00 | -5.01E-02 | -1.23E-02 | -2.60E-02 | -1.09E-03 | -1.26E-02 | -4.70E+01 | -6.33E+00 | -5.50E-08 | -1.04E-02 | -1.46E-01 | -2.64E-01 | 5.54E-02 | -3.53E-03 | -7.84E-04 | -7.48E-04 |
| -3.70E-02 | 2.83E-04 | -3.68E-05 | -1.50E-05 | 1.70E-05 | -3.43E-05 | -2.94E-03 | -1.92E-04 | -9.35E-07 | -1.92E-04 | -9.02E-03 | -1.17E-03 | 8.45E-07 | -3.45E-02 | -1.51E-02 | -3.49E-03 | -7.75E-03 | -1.41E-05 | 3.22E-03 | -3.49E-03 | -6.36E-02 | 3.26E-08 | 3.89E-04 | -2.11E-01 | 1.56E-01 | 1.22E-02 | -7.52E-04 | -1.76E-04 | -1.67E-04 |
| -3.50E-01 | 4.40E-03 | -1.54E-04 | -9.09E-05 | 8.98E-05 | -2.19E-04 | -2.88E-02 | -9.51E-04 | -3.70E-06 | -9.51E-04 | -6.83E-02 | -6.28E-03 | 6.38E-06 | -4.08E-01 | -6.62E-02 | -1.58E-02 | -3.40E-02 | 4.55E-03 | -5.24E-02 | 8.02E-02 | -1.09E+00 | -5.92E-07 | -2.47E-02 | -9.21E+00 | -2.95E+00 | 5.80E-02 | -3.56E-03 | -8.34E-04 | -7.94E-04 |
| -8.28E-02 | 4.65E-04 | -2.42E-04 | 4.41E-05 | -4.83E-04 | -1.34E-04 | -5.96E-03 | -5.25E-03 | -5.29E-06 | -5.25E-03 | -1.88E-02 | -3.53E-03 | 1.58E-06 | -5.69E-02 | -1.64E-01 | -5.61E-02 | -7.66E-02 | 1.72E-05 | -1.05E-03 | -1.77E-02 | -6.95E-02 | -4.85E-09 | -3.77E-03 | -3.14E-03 | -2.33E-02 | -3.87E+01 | -5.89E-01 | -9.39E-02 | -9.97E-02 |
| -1.42E-02 | 7.50E-05 | -3.93E-05 | 4.77E-06 | -6.57E-05 | -2.26E-05 | -9.98E-04 | -7.60E-04 | -8.62E-07 | -7.60E-04 | -3.13E-03 | -5.82E-04 | 2.64E-07 | -9.51E-03 | -2.72E-02 | -8.63E-03 | -1.31E-02 | 2.95E-06 | -1.79E-04 | -2.89E-03 | -1.17E-02 | -8.08E-10 | -6.46E-04 | -4.27E-04 | -3.88E-03 | -3.13E+00 | 4.01E-01 | -7.17E-01 | -1.60E-01 |

# PHI OPT TMM Correlation

- Results

| Sensor | Location | Hot Case Test Temp. [ºC] | Hot Case TMM Temp. [ºC] | Hot Case Delta T [ºC] | Cold Case Test Temp. [ºC] | Cold Case TMM Temp. [ºC] | Cold Case Delta T [ºC] |
|---|---|---|---|---|---|---|---|
| HK01 | FG oven no. 1 | 64.2 | 63.4 | -0.7 | 66.0 | 65.6 | -0.4 |
| HK02 | FG oven no. 2 | 64.2 | 63.4 | -0.7 | 66.0 | 65.6 | -0.4 |
| HK19 | FG oven no. 1 | 64.1 | 63.3 | -0.8 | 65.8 | 64.9 | -0.9 |
| HK20 | FG oven no. 2 | 63.6 | 63.3 | -0.3 | 65.3 | 64.9 | -0.5 |
| HK14 | M2 baffle backside | 50.0 | 50.3 | 0.3 | -1.4 | -2.0 | -0.6 |
| HK07 | Winding temperature FRM Motor | 51.5 | 50.9 | -0.7 | -5.9 | -1.8 | 4.1 |
| HK13 | Temperature close to FRM | 53.2 | 51.4 | -1.8 | -2.7 | -3.0 | -0.4 |
| HK03 | FDT LCVR cell no. 1 | 60.1 | 59.0 | -1.1 | 18.6 | 17.6 | -1.0 |
| HK04 | FDT LCVR cell no. 2 | 60.3 | 58.9 | -1.4 | 18.7 | 17.4 | -1.3 |
| HK08 | Winding temperature FSM Motor | 50.0 | 50.6 | 0.6 | -4.8 | -1.3 | 3.5 |
| HK18 | M2 TT back Temperature | 51.7 | 51.8 | 0.1 | 2.7 | 1.9 | -0.8 |
| HK29 | Temperature HRT tip tilt-1 | 52.0 | 51.2 | -0.8 | -1.9 | -0.7 | 1.2 |
| HK30 | Temperature HRT tip tilt-2 | 51.7 | 50.9 | -0.8 | -2.2 | -1.5 | 0.8 |
| HK17 | RB, in the M1 fix mounting point | 50.8 | 50.7 | -0.1 | -2.2 | -1.5 | 0.7 |
| HK09 | Winding temperature CT Motor | 50.3 | 51.0 | 0.7 | -5.3 | -1.0 | 4.2 |
| HK34 | CPC board temperature | 56.1 | 55.9 | -0.2 | 5.0 | 5.4 | 0.4 |
| HK05 | HRT LCVR cell no. 1 | 60.0 | 59.8 | -0.1 | 40.0 | 39.3 | -0.7 |
| HK06 | HRT LCVR cell no. 2 | 59.5 | 59.7 | 0.2 | 38.5 | 39.0 | 0.4 |
| HK10 | HRT HRM | 50.5 | 50.9 | 0.4 | -4.5 | -0.8 | 3.7 |
| HK15 | OB Main, out of the illuminated | 52.0 | 50.1 | -1.9 | -2.0 | -1.8 | 0.2 |
| HK16 | HPMP aluminum housing | 51.5 | 51.2 | -0.4 | -2.0 | 0.5 | 1.5 |
| HK32 | FPA FPGA board Temperature | 50.9 | 52.6 | 1.7 | 2.4 | 3.6 | -1.2 |
| HK33 | FPA Sensor temperature | -17.2 | -17.0 | 0.2 | -39.2 | -36.5 | 2.7 |

# DTMM to RTMM

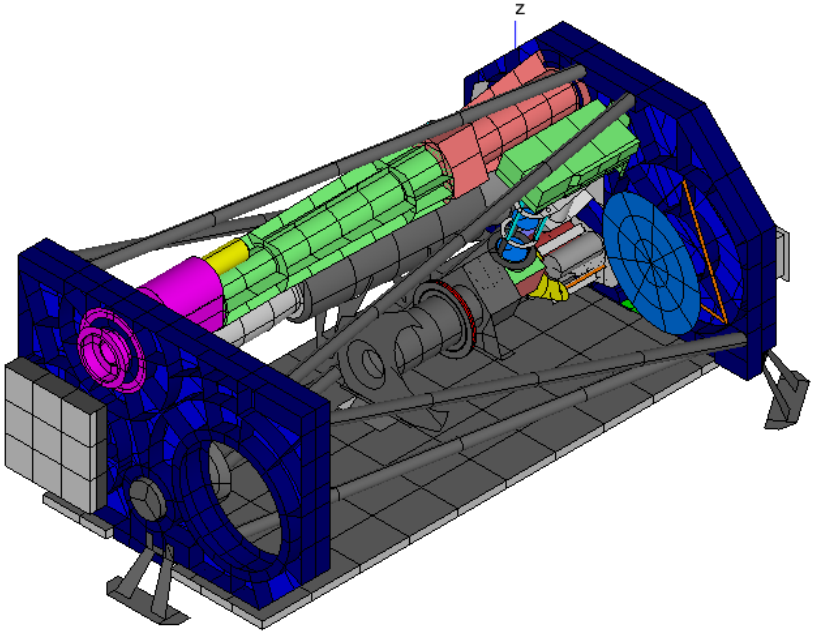


DTMM
7133 nodes

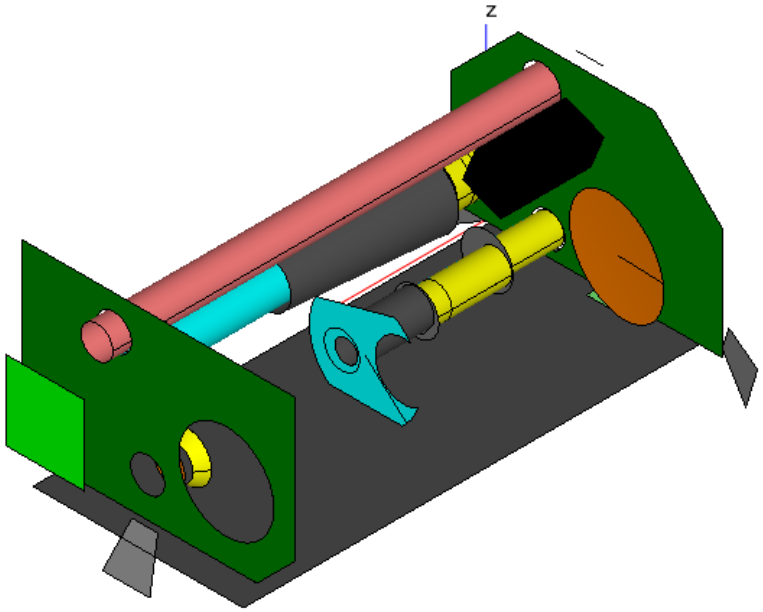


RTMM
43 nodes

# DTMM to RTMM

- Similar method used
- The RTMM has been correlated using the temperatures from the correlated DTMM
- Direct variation of GLs instead of parameters

- Max delta T ($T_{DTMM} - T_{RTMM}$): 2.7 ºC

# Final remarks

Test to Model correlation

- The TMM has been adapted to be able to calculate the Jacobian matrix and the linearization of the radiative terms →Lot of work!
- The parameters used affects very locally
- No thermal capacities correlation. Only steady-state cases correlated

# Final remarks

DTMM to RTMM correlation

- Easier and faster to generate the jacobian matrix and the linearization of radiative terms
- No thermal capacities correlation. Only steady-state cases correlated
- The method only correlates the temperatures. It has been necessary to adjust the model ‘by hand’ to obtain the same flux through the IFs

# Final remarks

- The method has been valid to correlate the TMM with the test temperatures as well as the RTMM with the DTMM
- Academic exercise and proof the method can be used in real scenarios but,
- Probably Easer and faster to correlate the model ‘by hand’

Future work

- Integrate the method in the TMM from the beginning
- Transients analysis

# Bye

Thank you for your attention!