TFAWS Active Thermal Paper Session

Zero-Gravity Effects on Vapor Compression Cycle Performance for Cold Food Storage with Oil-Free Compression

Anthony Skipworth[1*], Stephen L. Caskey[1], Leon Brendel[3], Alberto Gomes[2], Rahul Chhajed[2], Sanket Phalak[2], Sanjesh Pathak[2], Eckhard A. Groll[3]

[1] Air Squared, Inc., 510 Burbank St, Broomfield, CO 80020
[2]Whirlpool Corporation, 151 Riverview Dr, Benton Harbor, MI 49022
[3]Ray W. Herrick Laboratories, School of Mechanical Engineering, Purdue University, West Lafayette, IN 47907

Presented By

Anthony Skipworth

Thermal & Fluids Analysis Workshop
TFAWS 2021
August 24-26, 2021
Virtual Conference

Outline

1. Introduction
2. Approach
3. System Design
4. Zero-Gravity Test Results
5. Conclusions

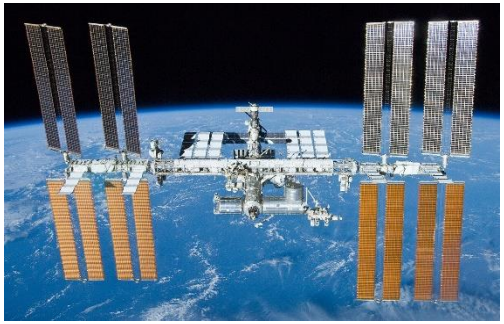

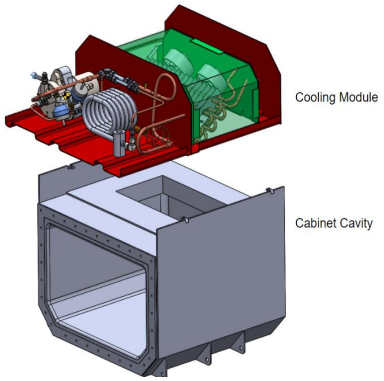

Colonizing Another Planet or Moon

- Increasing interest in colonizing the Moon and Mars from NASA and private space organizations
- Currently astronauts only eat food that is shelf stable for 1-to-3 years and nutritional value lost over time
- Humans need access to nutritional food for long duration space flight
- Store food at cold temperatures to reach up-to 7 years of storage

Space Cooling Technologies

- Used in space to achieve cold temperatures
  - Thermoelectric (TE) Cooling
    - No moving parts with high reliability
    - Low COP
  - Reversed Brayton
    - Higher COP over TE cooling
    - Low heat exchanger performance with vapor working fluid
    - Sensitive components better suited for continuous microgravity operation. Potentially sensitive to launch loads.
  - Stirling Engine
    - Higher COP over TE cooling
    - Low heat exchanger performance with vapor working fluid
    - Robust against launch loads
  - Vapor Compression Cycle
    - Higher COPs
    - Earth based applications rely on gravity to manage oil for compressor
    - How to extend application to microgravity environments?

Benefits of VCC

- VCC uses two-phase heat exchangers for improved heat transfer
- Oil-free scroll compressor allows VCC to operate in zero-gravity.
  - Mitigates need for gravity driven oil pooling to maintain lubrication
- Complications that could arise in zero-gravity
  - Liquid refrigerant entering compressor suction port
  - Moisture management on evaporator coil

Design Requirements

- NASA provided design requirements
  - Temperature level
  - Cooling capacity
  - Weight
  - Power consumption
  - Food storage volume
- Cold storage system required temperatures within range of -80C and 20C
  - Select design temperature of -22C to support frozen storage with R-134a while maintaining high expected VCC performance

Expanded NASA Cold Storage Requirements																	
	Food Storage Volume			Food Total Weight		Weight Limit		Power Limit (-22C)		VCC Required Cooling Capacity (-22C)							
Food Density [kg/m3]				250	500	250	500	250	500	250	500	250	500	250	500	250	500
Mass Eff. [kg/kg of food]						0.2		0.2		0.2							
Sys. Eff. [W/kg of food]								0.15		0.15							
VCC COP [-]										0.5		1		1.5		2	
	[ft3]	*[L]*	*[m3]*	*[kg]*		*[kg]*		*[W]*		*[W]*							
	71	2000	2	500	1000	100	200	75	150	37.5	75	75	150	112.5	225	150	300
	141	4000	4	1000	2000	200	400	150	300	75	150	150	300	225	450	300	600
	212	6000	6	1500	3000	300	600	225	450	112.5	225	225	450	337.5	675	450	900
	283	8000	8	2000	4000	400	800	300	600	150	300	300	600	450	900	600	1200

Design Requirements

- Fit within space constraints of 2 Middeck Lockers (MDL) in a single EXPRESS Rack
  - Provides assurance that the same configuration would work well on the ISS
- Total internal volume of $4ft^3$ inside two MDLs
- Limited amount of instrumentation

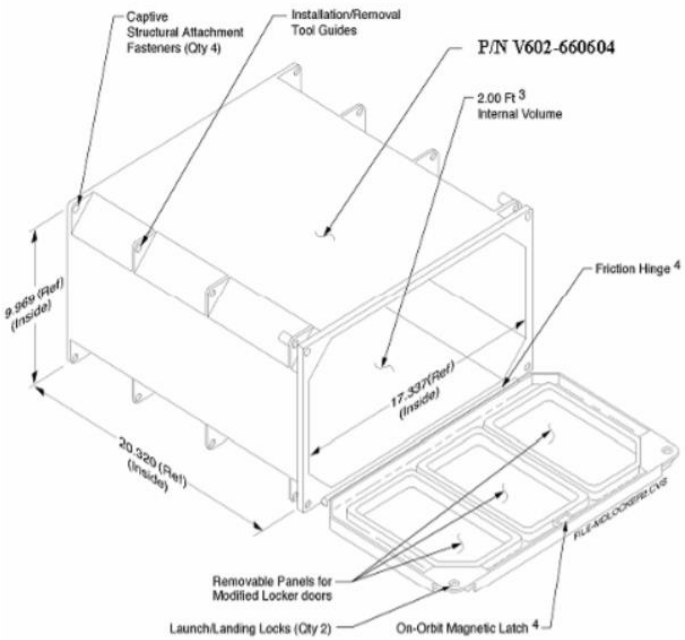

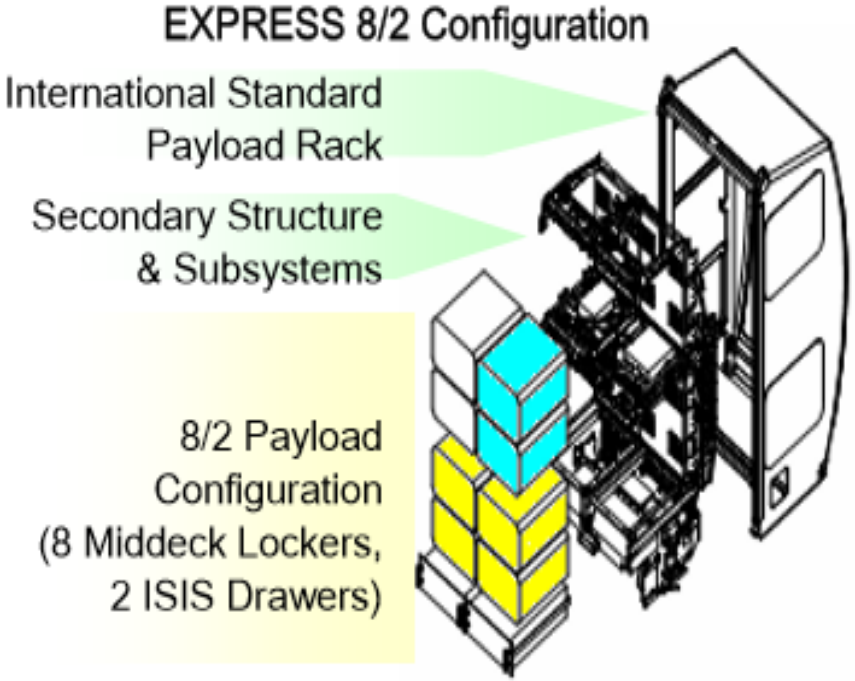

Parabolic Flights

- Simulated periods of zero-gravity for 20-25 seconds
- 30 parabolas per flight and 5 parabolas per set
- Refrigeration system tested on 4 parabolic flights
- Results focus on flights 1 (steady-state operation) and 3 (cabinet pull down temperature)

Modular Refrigeration System

- Refrigerator separated into 2 sections
  - Cooling module
  - Cabinet cavity
- Modular design increased ease of serviceability
- Oversized cooling module due to sensors and instrumentation

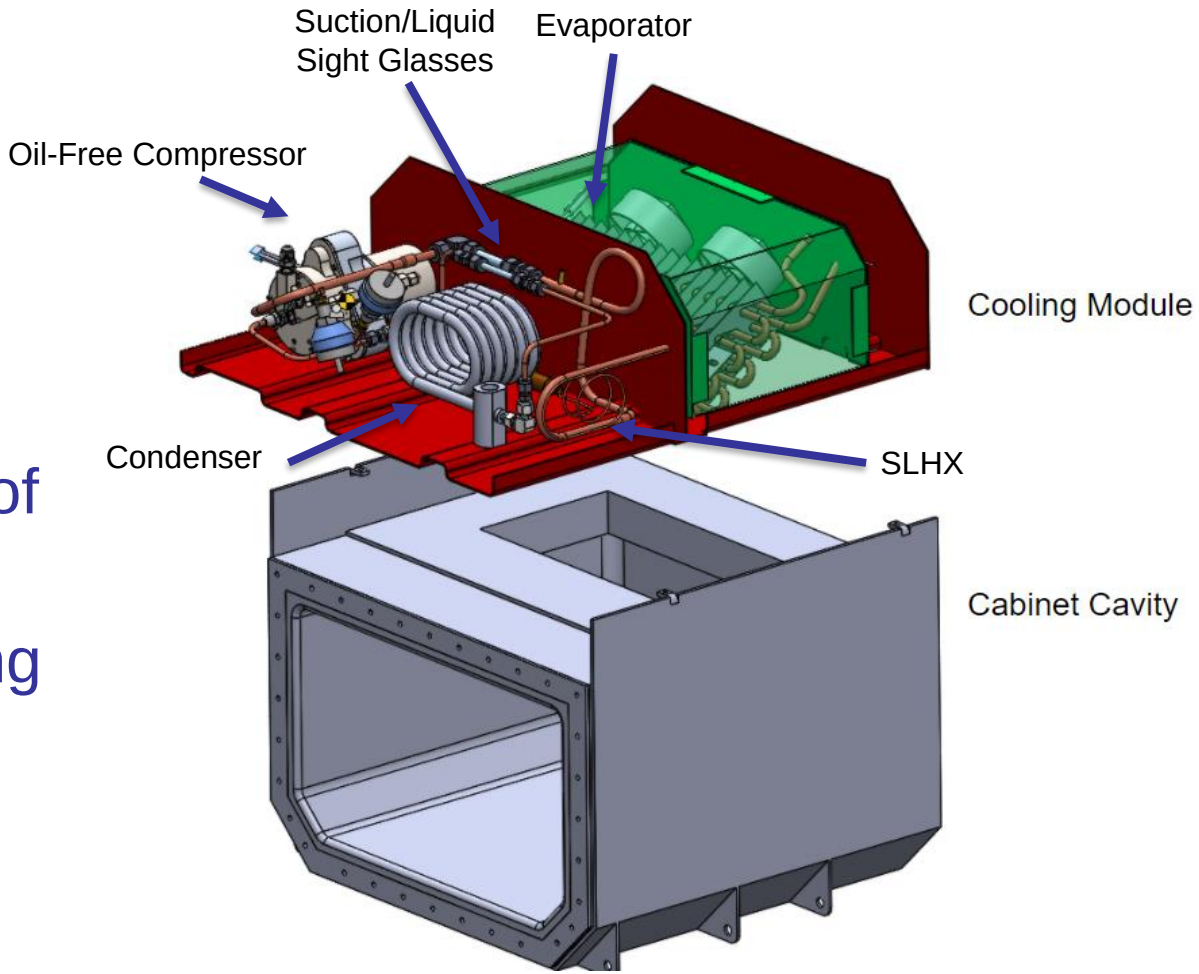

Piping & Instrumentation Diagram

- Vapor compression cycle consists of 4 major components
- Liquid cooling from external pressurized water loop
- Instrumentation was limited due to space constraints

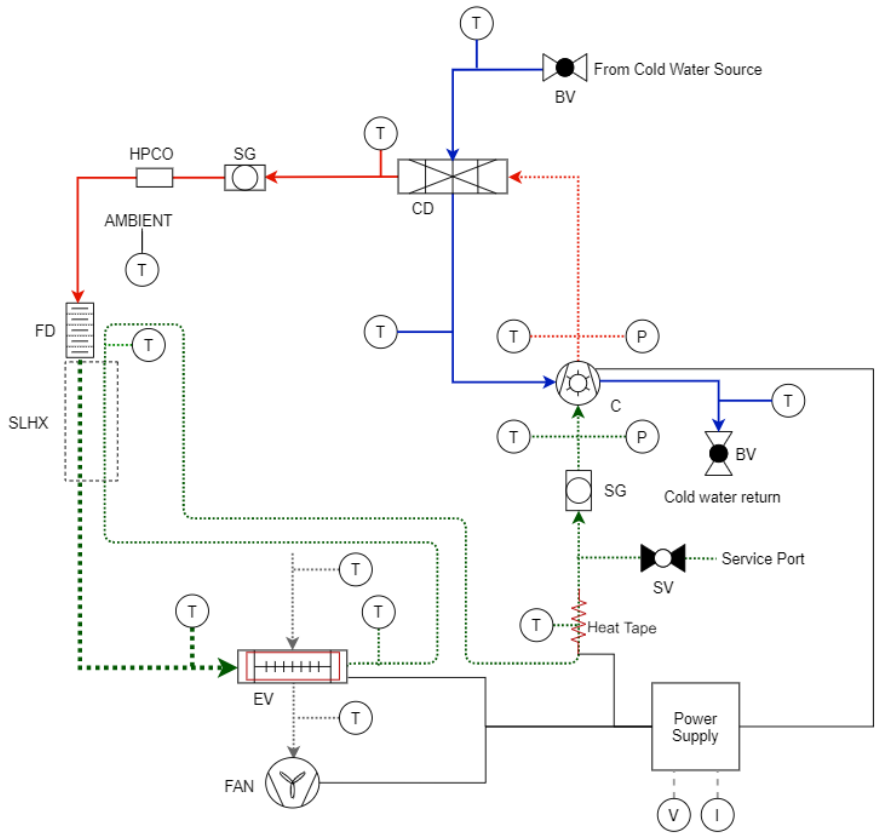

Legend

Icon	Description	Identifier
T	Thermocouple	T
P	Pressure Transducer	P
	Fin and Tube Heat Exchanger with Heating Element	EV
	Flat Plat Heat Exchanger	CD
	Filter-Dryer	FD
	Ball Valve	BV
	Schrader Valve	SV
	Sight Glass	SG
	Compressor	C

Color/Dash Code

Line Type/Color	Description
	High Pressure
	Low Pressure
	Cold Fluid
	Air
	Vapor
	2-Phase
	Liquid

Flight Day 1 Test Results

Cabinet and Evaporator Temperature

- Cabinet reaches steady state temperature of -13C around 10:05
- Large fluctuations in evaporation temperature during gravity level oscillation
- Relatively constant cabinet supply temperature and growing fluctuations in cabinet return temperature
- Downward trend in temperatures after 10:45 due to increase in compressor speed

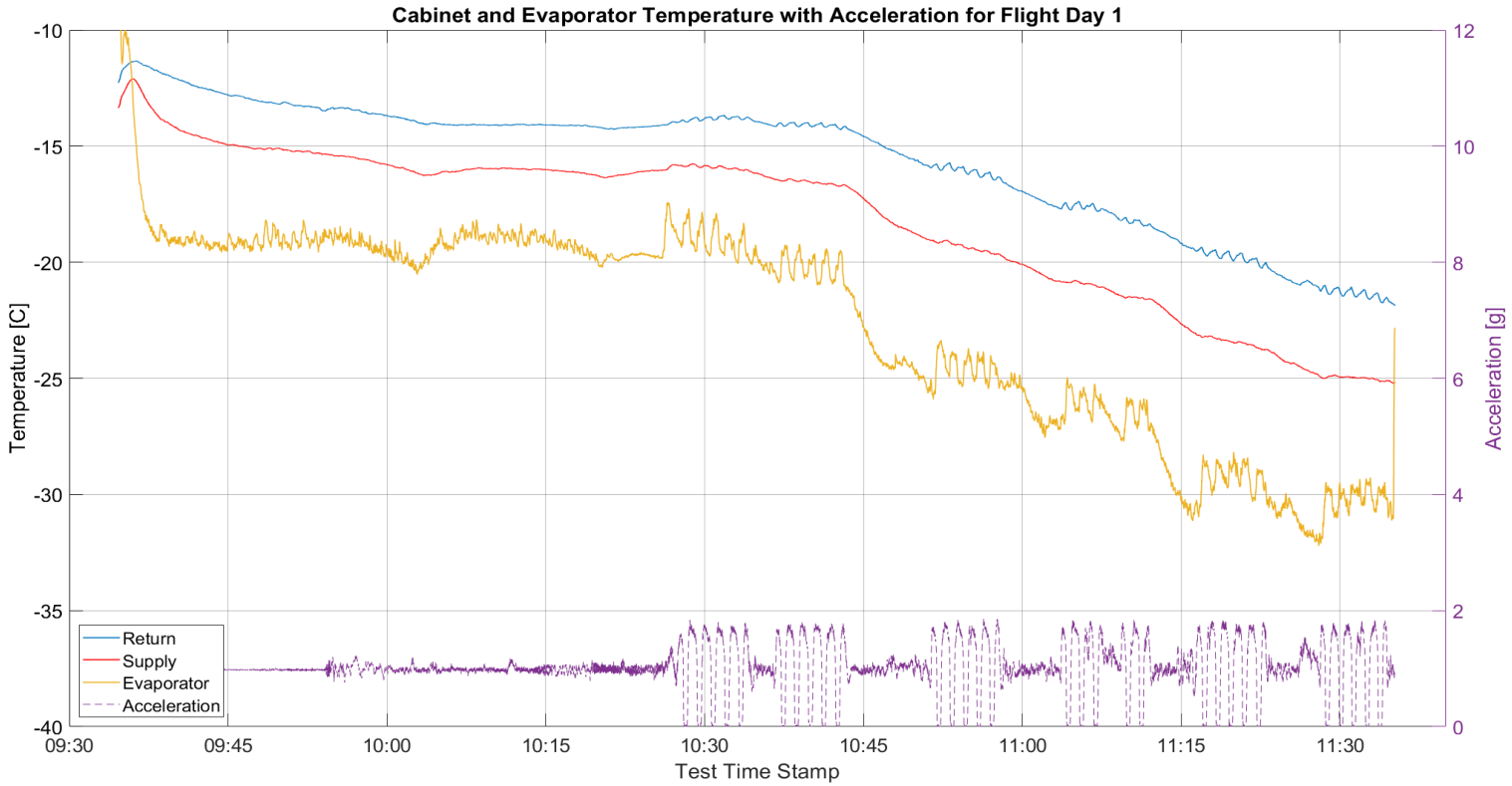

Compressor Pressures

- Compressor speed incremented every 2 sets of zero-gravity parabolas
  - Increase in compressor speed correlates to decrease in suction pressure
- Suction pressure increases during periods of zero-gravity and discharge pressure remains unaffected
- Constant decrease in compressor discharge pressure due to airplane cabin temperature

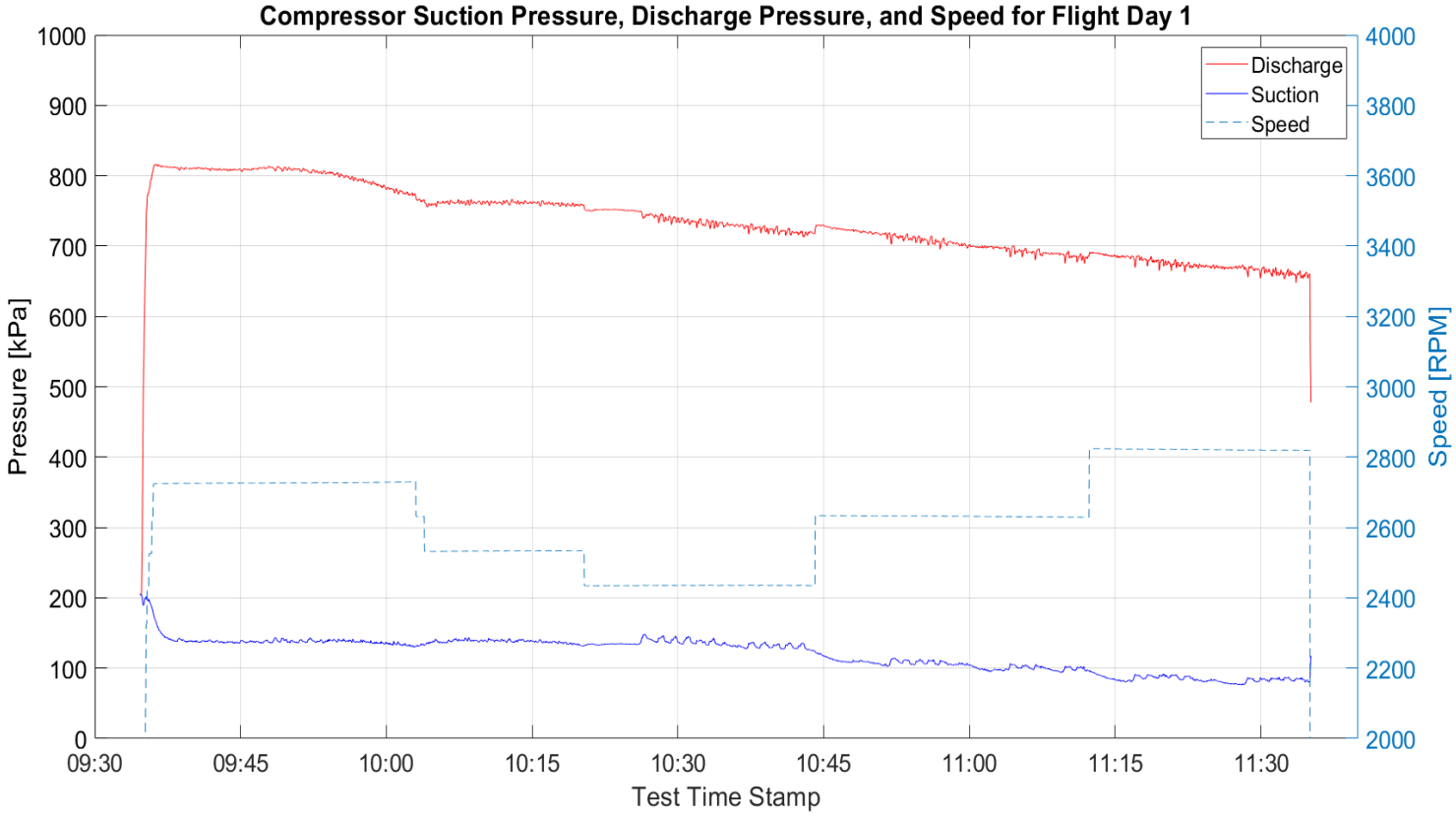

Cabinet Temperatures in Zero-Gravity

- Cabinet return temperature decreases in zero-gravity while return temperature remains constant
  - Increased evaporator capacity extracts more heat from cabinet
  - Increased evaporator fan velocity in zero-gravity?
  - Net zero change of supply temperature from increase in evaporator capacity and increase in evaporation temperature?

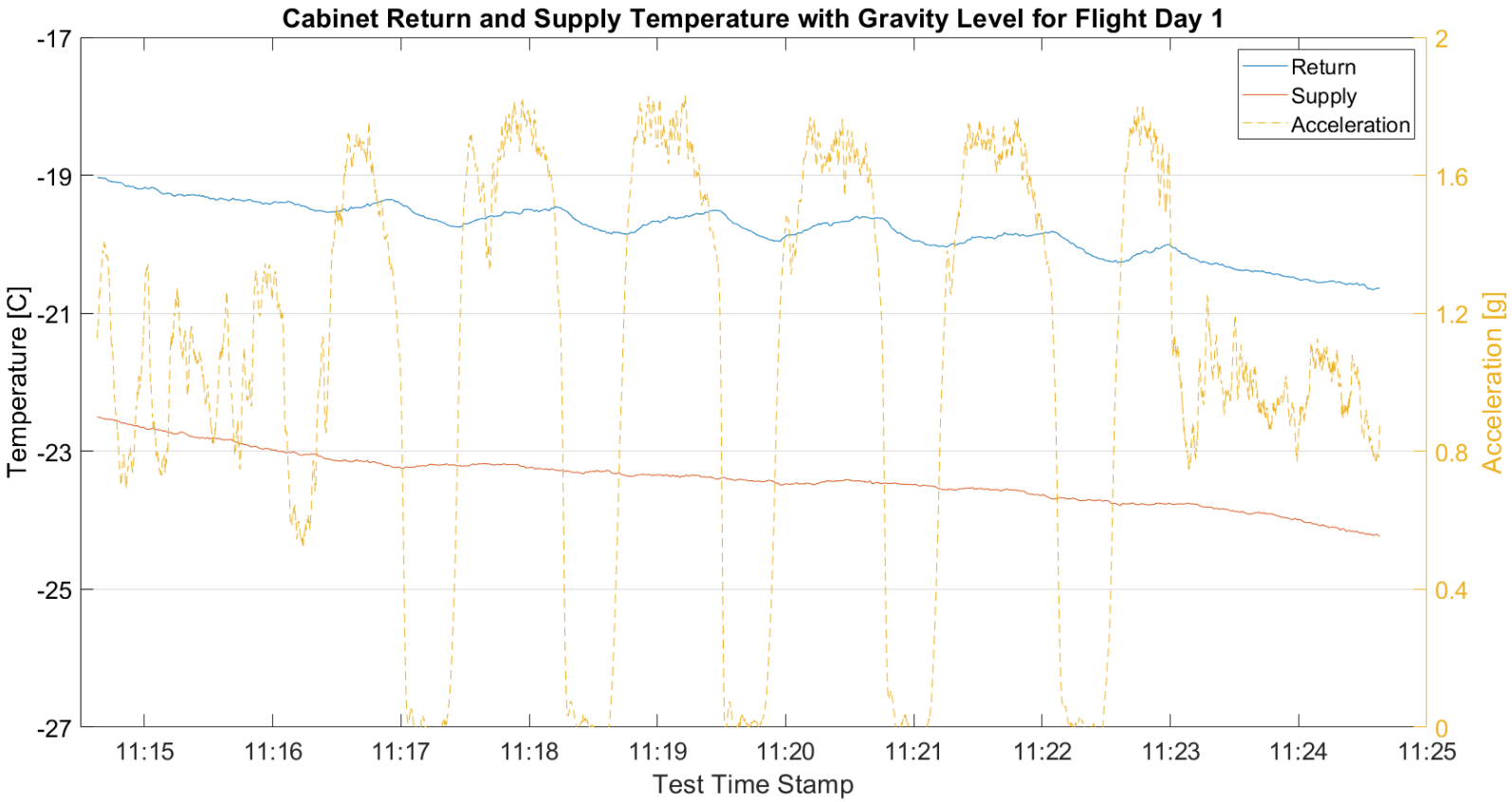

Evaporator Capacity in Zero-Gravity

- Refrigerant side evaporator capacity increased during periods of zero-gravity
  - Result of refrigerant density increase at compressor suction
  - Supports hypothesis of cabinet return temperature decreasing in zero-gravity
- Annular flow regime allows heat to be extracted at greater rate from cabinet

$$\dot{m}_{ideal} = \rho_{in} S_v N_{comp} \Rightarrow \dot{m}_{ref} = \eta_{vol} \dot{m}_{ideal} \Rightarrow \dot{Q}_{evap} = \dot{m}_{ref}\left(h_{e,out} - h_{e,in}\right)$$

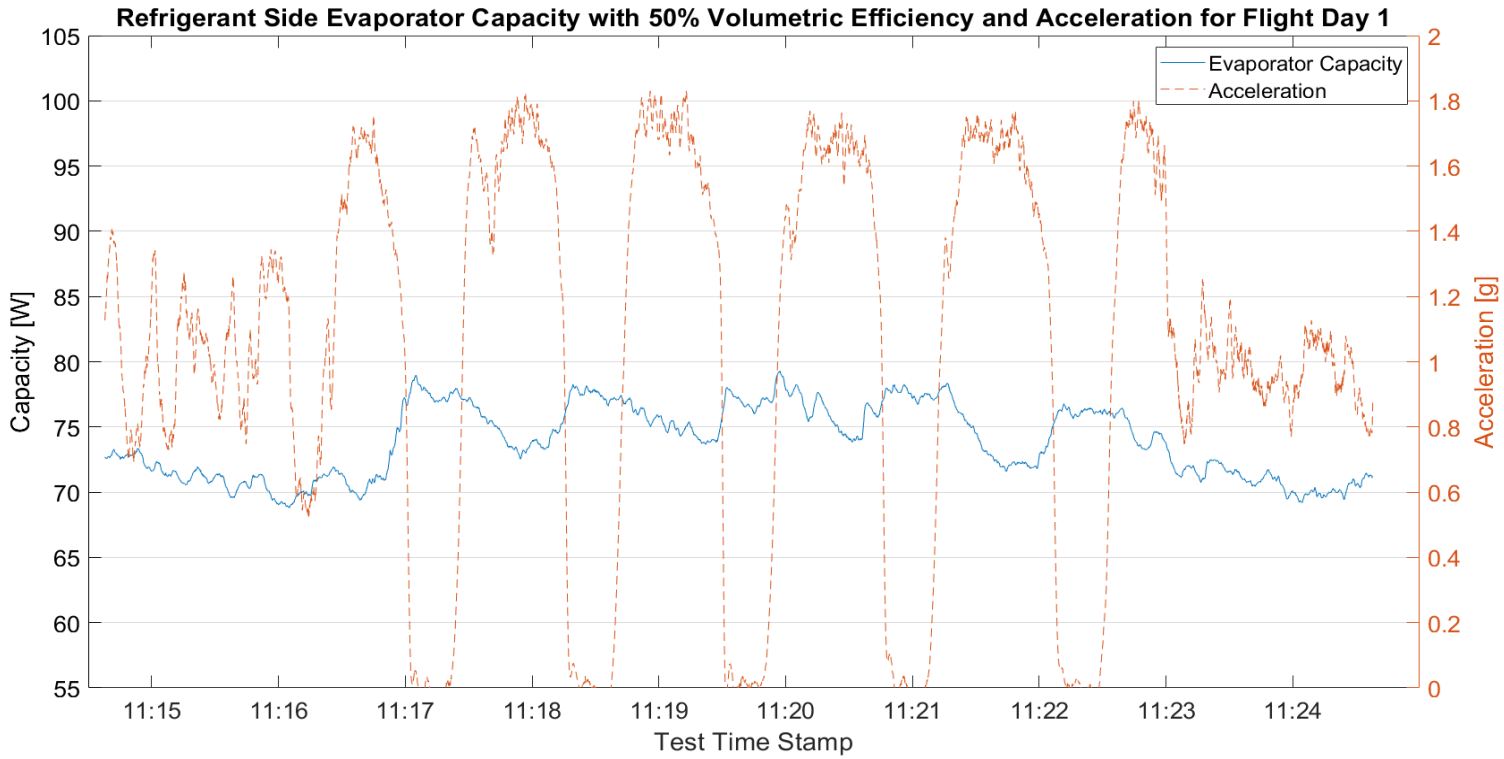

Flight Day 3 Test Results

Pull Down in Zero-Gravity

- Cabinet temperatures decrease fastest at start-up
- Approach steady-state temperature as cabinet temperatures approach evaporator temperature
- High-speed compressor operation produces lowest evaporator temperature
- Compressor cycling between time stamps 10:45 – 11:05

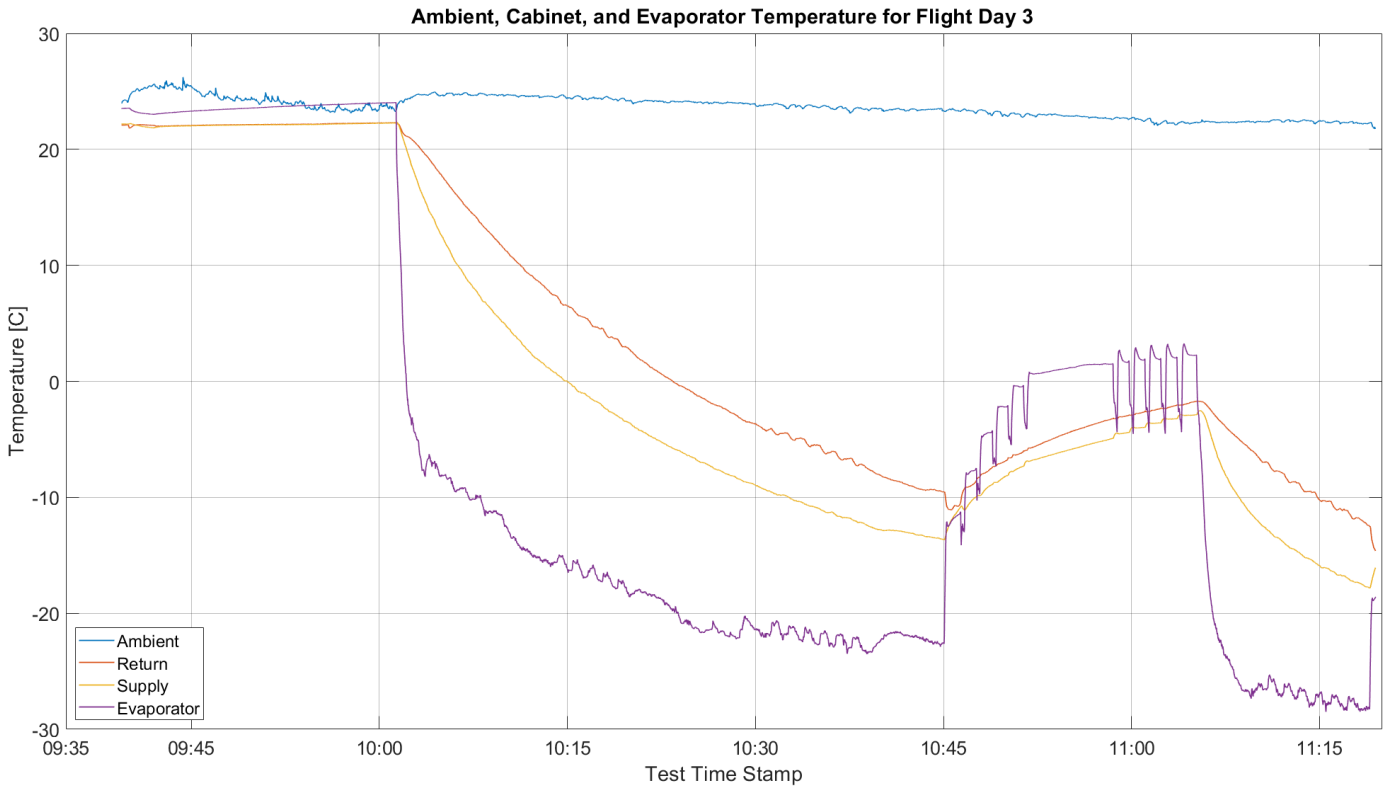

Evaporator Temperature Difference

- Temperature difference between cabinet supply and evaporator indicative of air-side evaporator capacity
  - Cabinet temperature decrease fastest with greater temperature difference
  - Potential decrease in air-side evaporator capacity in zero-gravity
- Return and supply temperature slightly decrease
  - Could be consequence of frost formation on evaporator

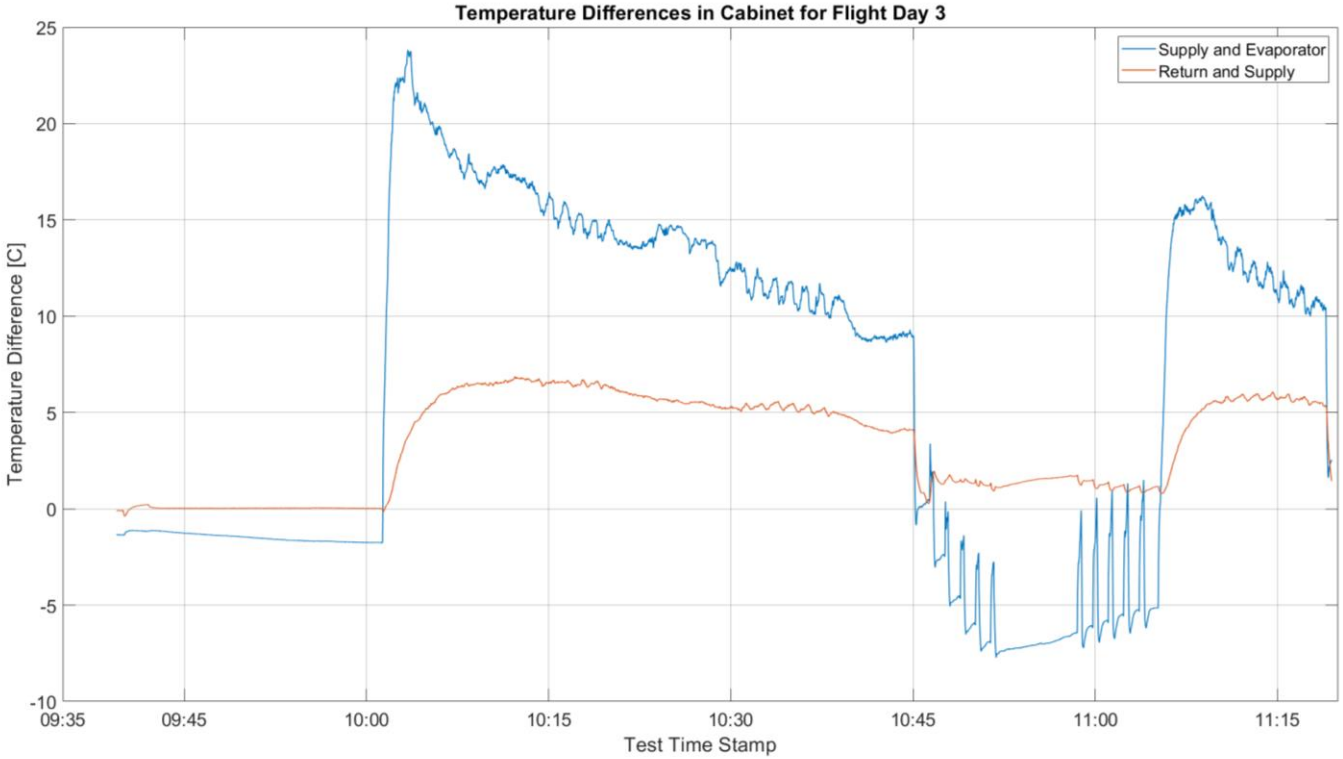

Conclusion

- Refrigeration system has promise to be effective in zero-gravity environments
  - Can pull down cabinet temperatures to freezer temperatures
- Increase in evaporator capacity captured during zero-gravity parabola
  - Cabinet return temperature decreases faster in zero-gravity versus in hyper-gravity
  - Potentially faster pull-down time in zero-gravity
    - Less run time of refrigeration system leads to less power consumption and longer life span
- True steady-state operation of VCC has yet to be characterized in zero-gravity
- Additional testing in long duration, sustained zero-gravity environment encouraged to build confidence in results

Thank you!

Special thanks to NASA and Whirlpool for technical guidance and funding this effort!

Questions?